PRODUCT CATALOGUE 26-27

PRIDE INDUSTRIAL LLC®

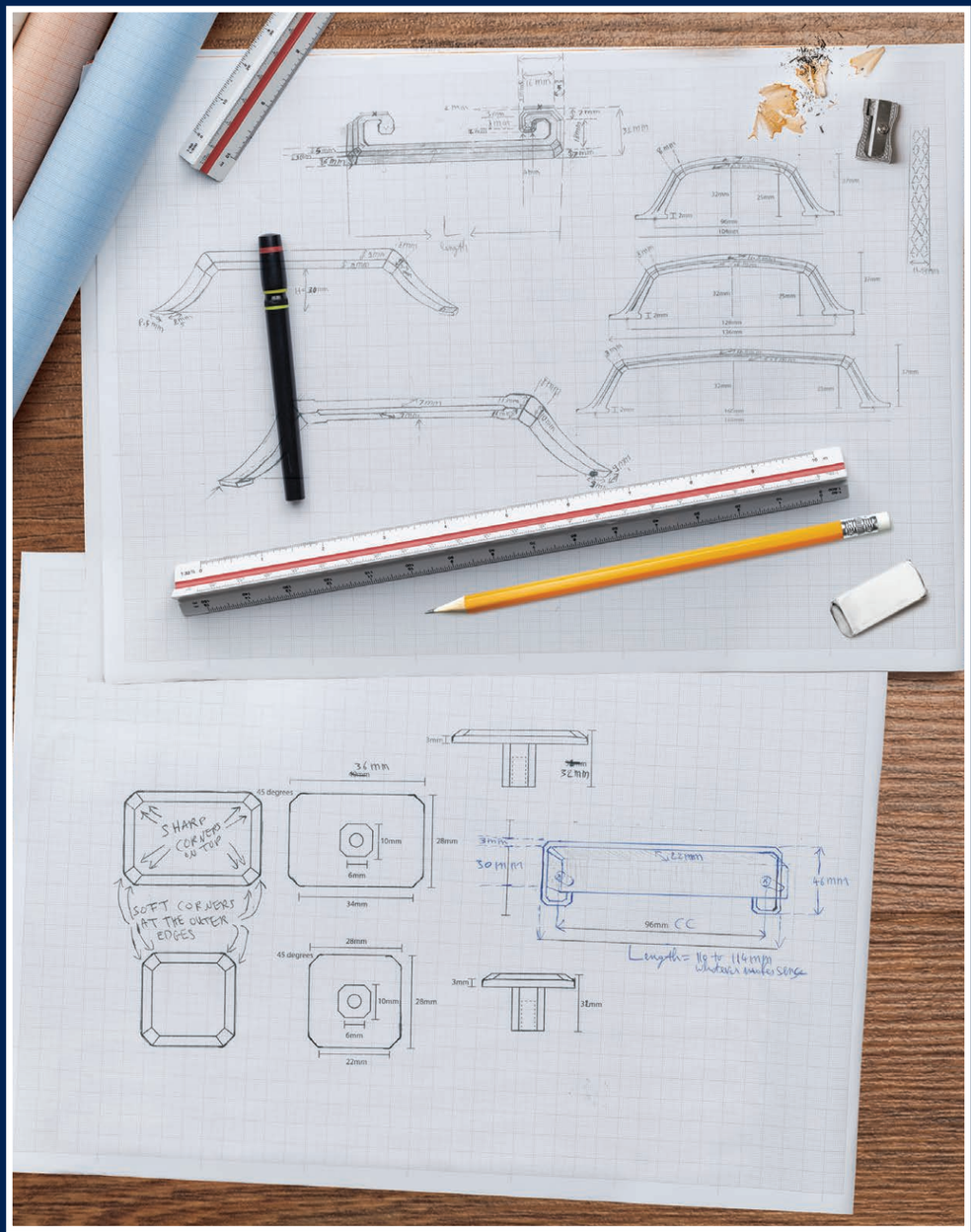

Our inhouse designers are dedicated to crafting and creating Pride Décor's truly unique cabinet hardware for high-end residential & commercial projects as well as the most popular designs for multi-family and single-family living. Our attention to detail starts with each design's inception, our goal is to stun in every final look we create. Discover our designs and feel inspired.

TABLE OF CONTENTS

Knobs & Pulls	1-60
Closet Rods & Fittings	61-63
Adjustable Closet Rods	64
Decorative Wood	65-81
Slides	82-104
Kitchen Organization	105-107
Institutional Hinges	108
European Hinges & Plates	109-126
Countertop Bracket, L-brackets & Mending Plates	127
Shelf Support, RTA & Catches	128-131
Shutter Hardware	132-133
Leg Hardware	134
Grommets	135-136
Levelers, Bump-on, etc.	137-139

Magnificent Collections

Patented Designs

New Collection

page 7-8

Size Extensions Collection

page 9-11

Valencia Collection

page 12

Florence Collection

page 13

Magnificent Collections

Patented Designs

Monaco Collection

page 14

Madison Collection

page 15-16

Milan Collection

page 17-18

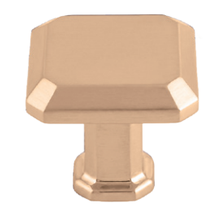

Manhattan Collection

page 19-20

Colorado Collection

page 21-22

St. Louis Collection

page 23

Washington Collection

page 24

Miami Collection

page 26

Square Pull Collection

page 27-28

Vail Collection

page 29

Charlotte Collection

page 30

Bar Pull Collection

page 31-37

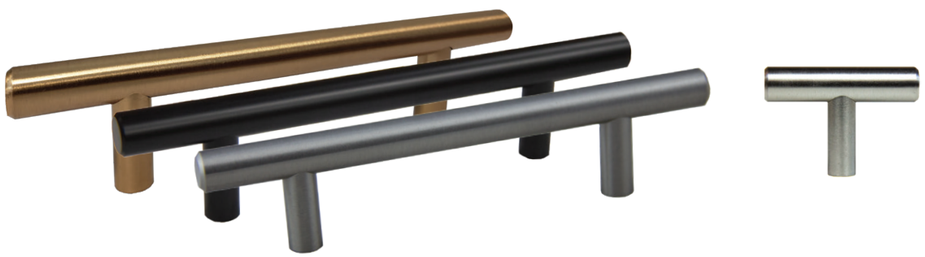

Eleganza Collection

page 38

Large Selection of Modern Handles

page 39-42

Charleston Collection

page 43

Cup Pulls Collection

page 44

Large Selection of Tab Pulls

page 45-46

PRIDE DÉCOR®

New Collection

Fluted pull, square profile, faceted edges.

Clean geometry.
Confident style.

A coordinated collection of square pulls and matching knobs created to add architectural character, balanced form, and a polished finishing touch to contemporary cabinetry.

STRUCTURED FOR DESIGN. MADE TO STAND OUT.

COMING SOON

Fluted round pull with faceted edges.

Modern lines.
Distinctive finishes.

A refined collection of linear pulls designed to bring bold definition, balanced proportions, and everyday performance to contemporary cabinetry.

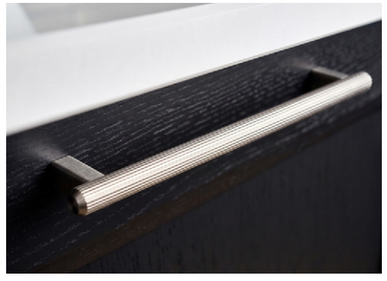

STRUCTURED FOR DESIGN. MADE TO STAND OUT.

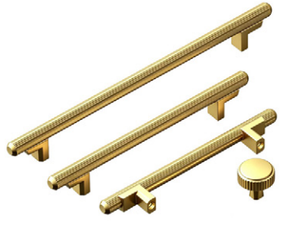

Pride Décor® Size Extensions Collection

Miami | Charlotte | Manhattan | Colorado

P-A5108
Miami Appliance Pull 8" C/C

CASE QTY	50	WEIGHT/CASE	13.87 lbs
BOX QTY	5	PROJECTION	27 mm
LENGTH	227.2 mm	WIDTH	8.3 mm

Available Colors	Item Number
Matte Black	P-A5108.BK
Rose Gold	P-A5108.RG
Satin Nickel	P-A5108.SN

P-A51012
Miami Appliance Pull 12" C/C

CASE QTY	20	WEIGHT/CASE	21.52 lbs
BOX QTY	5	PROJECTION	43.6 mm
LENGTH	348.2 mm	WIDTH	15 mm

Available Colors	Item Number
Matte Black	P-A51012.BK
Rose Gold	P-A51012.RG
Satin Nickel	P-A51012.SN

P-A51018
Miami Appliance Pull 18" C/C

CASE QTY	10	WEIGHT/CASE	16.4 lbs
BOX QTY	5	PROJECTION	43.6 mm
LENGTH	500.6 mm	WIDTH	15 mm

Available Colors	Item Number
Matte Black	P-A51018.BK
Rose Gold	P-A51018.RG
Satin Nickel	P-A51018.SN

P-A5208
Charlotte Appliance Pull 8" C/C

CASE QTY	50	WEIGHT/CASE	18.93 lbs
BOX QTY	5	PROJECTION	29.5 mm
LENGTH	218.3 mm	WIDTH	19.7 mm

Available Colors	Item Number
Matte Black	P-A5208.BK
Rose Gold	P-A5208.RG
Satin Nickel	P-A5208.SN

P-A52012
Charlotte Appliance Pull 12" C/C

CASE QTY	20	WEIGHT/CASE	15.71 lbs
BOX QTY	5	PROJECTION	39 mm
LENGTH	321.9 mm	WIDTH	19.9 mm

Available Colors	Item Number
Matte Black	P-A52012.BK
Rose Gold	P-A52012.RG
Satin Nickel	P-A52012.SN

P-A5308
Manhattan Appliance Pull 8" C/C

CASE QTY	50	WEIGHT/CASE	19.04 lbs
BOX QTY	5	PROJECTION	30 mm
LENGTH	230.4 mm	WIDTH	16.3 mm

Available Colors	Item Number
Matte Black	P-A5308.BK
Rose Gold	P-A5308.RG
Satin Nickel	P-A5308.SN

P-A53012
Manhattan Appliance Pull 12" C/C

CASE QTY	20	WEIGHT/CASE	18.88 lbs
BOX QTY	5	PROJECTION	38 mm
LENGTH	341.1 mm	WIDTH	21.7 mm

Available Colors	Item Number
Matte Black	P-A53012.BK
Rose Gold	P-A53012.RG
Satin Nickel	P-A53012.SN

P-A53018
Manhattan Appliance Pull 18" C/C

CASE QTY	10	WEIGHT/CASE	17.6 lbs
BOX QTY	5	PROJECTION	38 mm
LENGTH	493.5 mm	WIDTH	21.85 mm

Available Colors	Item Number
Matte Black	P-A53018.BK
Rose Gold	P-A53018.RG
Satin Nickel	P-A53018.SN

Pride Décor® Size Extensions Collection

Vail | Modern | Monaco | Milan

P-A5408
Colorado Appliance Pull 8" C/C

CASE QTY	50	WEIGHT/CASE	22.67 lbs
BOX QTY	5	PROJECTION	32 mm
LENGTH	225.2 mm	WIDTH	16 mm

Available Colors	Item Number
Matte Black	P-A5408.BK
Rose Gold	P-A5408.RG
Satin Nickel	P-A5408.SN

P-A54012
Colorado Appliance Pull 12" C/C

CASE QTY	20	WEIGHT/CASE	20.07 lbs
BOX QTY	5	PROJECTION	40 mm
LENGTH	332.3 mm	WIDTH	20 mm

Available Colors	Item Number
Matte Black	P-A54012.BK
Rose Gold	P-A54012.RG
Satin Nickel	P-A54012.SN

P-A54018
Colorado Appliance Pull 18" C/C

CASE QTY	10	WEIGHT/CASE	15.7 lbs
BOX QTY	5	PROJECTION	40 mm
LENGTH	484.7 mm	WIDTH	20 mm

Available Colors	Item Number
Matte Black	P-A54018.BK
Rose Gold	P-A54018.RG
Satin Nickel	P-A54018.SN

P-A5508
Vail Appliance Pull 8" C/C

CASE QTY	50	WEIGHT/CASE	13.87 lbs
BOX QTY	5	PROJECTION	37.5 mm
LENGTH	224.8 mm	WIDTH	19.1 mm

Available Colors	Item Number
Matte Black	P-A5508.BK
Rose Gold	P-A5508.RG
Satin Nickel	P-A5508.SN

P-A55012
Vail Appliance Pull 12" C/C

CASE QTY	20	WEIGHT/CASE	32.26 lbs
BOX QTY	5	PROJECTION	59.1 mm
LENGTH	336.6 mm	WIDTH	25.1 mm

Available Colors	Item Number
Matte Black	P-A55012.BK
Rose Gold	P-A55012.RG
Satin Nickel	P-A55012.SN

P-A5608
Modern Square Appliance Pull 8" C/C

CASE QTY	50	WEIGHT/CASE	18.93 lbs
BOX QTY	5	PROJECTION	35 mm
LENGTH	213.2 mm	WIDTH	10.4 mm

Available Colors	Item Number
Matte Black	P-A5608.BK
Rose Gold	P-A5608.RG
Satin Nickel	P-A5608.SN

P-A56012
Modern Square Appliance Pull 12" C/C

CASE QTY	10	WEIGHT/CASE	20.38 lbs
BOX QTY	5	PROJECTION	58.5 mm
LENGTH	323.8 mm	WIDTH	19 mm

Available Colors	Item Number
Matte Black	P-A56012.BK
Rose Gold	P-A56012.RG
Satin Nickel	P-A56012.SN

P-A56018
Modern Square Appliance Pull 18" C/C

CASE QTY	10	WEIGHT/CASE	24.4 lbs
BOX QTY	5	PROJECTION	48.5 mm
LENGTH	476.2 mm	WIDTH	18 mm

Available Colors	Item Number
Matte Black	P-A56018.BK
Rose Gold	P-A56018.RG
Satin Nickel	P-A56018.SN

Pride Décor® Size Extensions Collection

Valencia

P-A5708
Monaco Appliance Pull 8" C/C

CASE QTY	40	WEIGHT/CASE	33.54 lbs
BOX QTY	5	PROJECTION	29.6 mm
LENGTH	264.4 mm	WIDTH	44 mm

Available Colors	Item Number
Matte Black	P-A5708.BK
Rose Gold	P-A5708.RG
Satin Nickel	P-A5708.SN

P-A5808
Milan Appliance Pull 8" C/C

CASE QTY	50	WEIGHT/CASE	16.51 lbs
BOX QTY	5	PROJECTION	40.5 mm
LENGTH	228.2 mm	WIDTH	10 mm

Available Colors	Item Number
Matte Black	P-A5808.BK
Rose Gold	P-A5808.RG
Satin Nickel	P-A5808.SN

P-A5908
Valencia Appliance Pull 8" C/C

CASE QTY	50	WEIGHT/CASE	16.51 lbs
BOX QTY	5	PROJECTION	39 mm
LENGTH	226.2 mm	WIDTH	14 mm

Available Colors	Item Number
Matte Black	P-A5908.BK
Rose Gold	P-A5908.RG
Satin Nickel	P-A5908.SN

P-A59018
Valencia Appliance Pull 18" C/C

CASE QTY	10	WEIGHT/CASE	22 lbs
BOX QTY	5	PROJECTION	45 mm
LENGTH	489.2 mm	WIDTH	20 mm

Available Colors	Item Number
Matte Black	P-A59018.BK
Rose Gold	P-A59018.RG
Satin Nickel	P-A59018.SN

P-A57012
Monaco Appliance Pull 12" C/C

CASE QTY	20	WEIGHT/CASE	21.65 lbs
BOX QTY	5	PROJECTION	41.2 mm
LENGTH	366 mm	WIDTH	44 mm

Available Colors	Item Number
Matte Black	P-A57012.BK
Rose Gold	P-A57012.RG
Satin Nickel	P-A57012.SN

P-A58012
Milan Appliance Pull 12" C/C

CASE QTY	40	WEIGHT/CASE	30.02 lbs
BOX QTY	5	PROJECTION	43 mm
LENGTH	331.8 mm	WIDTH	14.4 mm

Available Colors	Item Number
Matte Black	P-A58012.BK
Rose Gold	P-A58012.RG
Satin Nickel	P-A58012.SN

P-A59012
Valencia Appliance Pull 12" C/C

CASE QTY	20	WEIGHT/CASE	31.4 lbs
BOX QTY	5	PROJECTION	45 mm
LENGTH	336.8 mm	WIDTH	20 mm

Available Colors	Item Number
Matte Black	P-A59012.BK
Rose Gold	P-A59012.RG
Satin Nickel	P-A59012.SN

Pride Décor® Valencia Collection

Pending Patent

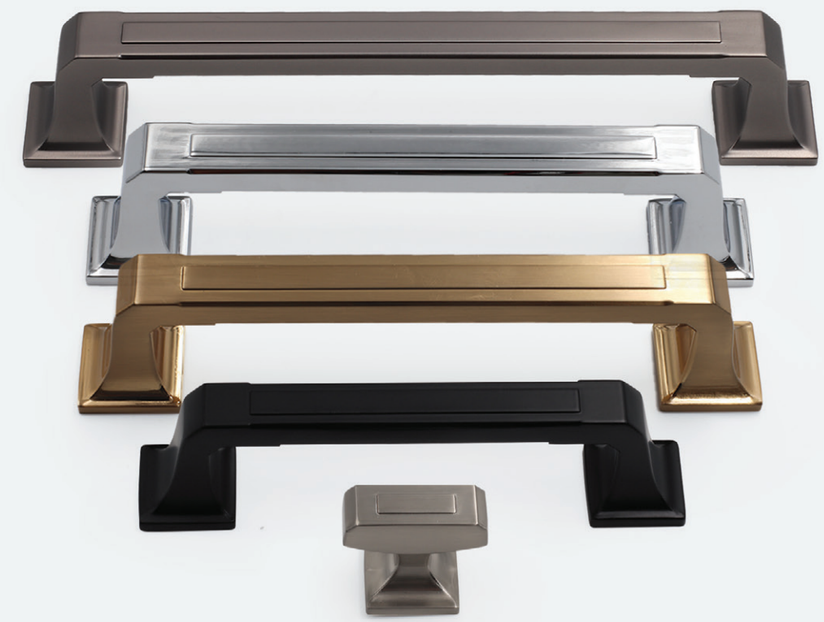

K-95003
Valencia Knob 38mm

CASE QTY	200	WEIGHT/CASE	28.4 lbs
BOX QTY	20	PROJECTION	32mm
LENGTH	25mm	WIDTH	25mm

Available Colors	Item Number
Oil Rubbed Bronze	K-95003.10B
Matte Black	K-95003.BK
Dark Pewter	K-95003.DP
Polished Chrome	K-95003.PC
Rose Gold	K-95003.RG
Satin Nickel	K-95003.SN

P-97128
Valencia Pull 128mm C/C

CASE QTY	60	WEIGHT/CASE	23.64 lbs
BOX QTY	10	PROJECTION	35mm
LENGTH	151mm	WIDTH	23mm

Available Colors	Item Number
Oil Rubbed Bronze	P-97128.10B
Matte Black	P-97128.BK
Dark Pewter	P-97128.DP
Polished Chrome	P-97128.PC
Rose Gold	P-97128.RG
Satin Nickel	P-97128.SN

P-97096
Valencia Pull 96mm C/C

CASE QTY	100	WEIGHT/CASE	26 lbs
BOX QTY	10	PROJECTION	32mm
LENGTH	117mm	WIDTH	21mm

Available Colors	Item Number
Oil Rubbed Bronze	P-97096.10B
Matte Black	P-97096.BK
Dark Pewter	P-97096.DP
Polished Chrome	P-97096.PC
Rose Gold	P-97096.RG
Satin Nickel	P-97096.SN

P-97160
Valencia Pull 160mm C/C

CASE QTY	60	WEIGHT/CASE	27.78 lbs
BOX QTY	10	PROJECTION	35mm
LENGTH	183mm	WIDTH	23mm

Available Colors	Item Number
Oil Rubbed Bronze	P-97160.10B
Matte Black	P-97160.BK
Dark Pewter	P-97160.DP
Polished Chrome	P-97160.PC
Rose Gold	P-97160.RG
Satin Nickel	P-97160.SN

Pride Décor® Florence Collection

Patented Design

K-93002
Florence Knob 39.5mm

CASE QTY	100	WEIGHT/CASE	27 lbs
BOX QTY	10	PROJECTION	32.5mm
LENGTH	39.5mm	WIDTH	39.5mm

Available Colors	Item Number
Oil Rubbed Bronze	K-93002.10B
Matte Black	K-93002.BK
Dark Pewter	K-93002.DP
Polished Chrome	K-93002.PC
Rose Gold	K-93002.RG
Satin Nickel	K-93002.SN

P-95128
Florence Pull 128mm C/C

CASE QTY	100	WEIGHT/CASE	52 lbs
BOX QTY	25	PROJECTION	46mm
LENGTH	167mm	WIDTH	11mm

Available Colors	Item Number
Oil Rubbed Bronze	P-95128.10B
Matte Black	P-95128.BK
Dark Pewter	P-95128.DP
Polished Chrome	P-95128.PC
Rose Gold	P-95128.RG
Satin Nickel	P-95128.SN

P-95096
Florence Pull 96mm C/C

CASE QTY	100	WEIGHT/CASE	46 lbs
BOX QTY	10	PROJECTION	46mm
LENGTH	135mm	WIDTH	11mm

Available Colors	Item Number
Oil Rubbed Bronze	P-95096.10B
Matte Black	P-95096.BK
Dark Pewter	P-95096.DP
Polished Chrome	P-95096.PC
Rose Gold	P-95096.RG
Satin Nickel	P-95096.SN

P-95160
Florence Pull 160mm C/C

CASE QTY	50	WEIGHT/CASE	31 lbs
BOX QTY	10	PROJECTION	46mm
LENGTH	200mm	WIDTH	11mm

Available Colors	Item Number
Oil Rubbed Bronze	P-95160.10B
Matte Black	P-95160.BK
Dark Pewter	P-95160.DP
Polished Chrome	P-95160.PC
Rose Gold	P-95160.RG
Satin Nickel	P-95160.SN

Pride Décor® Monaco Collection

Patented Design

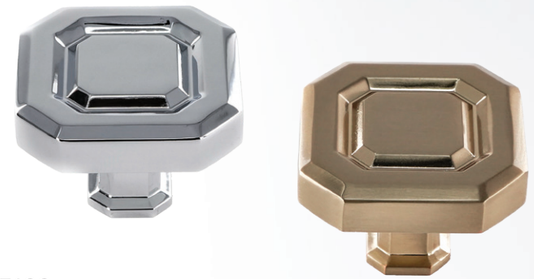

K-93122
Monaco Knob 45mm

CASE QTY	100	WEIGHT/CASE	35 lbs
BOX QTY	10	PROJECTION	33mm
LENGTH	45mm	WIDTH	45mm

Available Colors	Item Number
Oil Rubbed Bronze	K-93122.10B
Matte Black	K-93122.BK
Dark Pewter	K-93122.DP
Polished Chrome	K-93122.PC
Rose Gold	K-93122.RG
Satin Nickel	K-93122.SN

P-96096
Monaco Pull 96mm C/C

CASE QTY	100	WEIGHT/CASE	56 lbs
BOX QTY	10	PROJECTION	30mm
LENGTH	157mm	WIDTH	11mm

Available Colors	Item Number
Oil Rubbed Bronze	P-96096.10B
Matte Black	P-96096.BK
Dark Pewter	P-96096.DP
Polished Chrome	P-96096.PC
Rose Gold	P-96096.RG
Satin Nickel	P-96096.SN

P-96128
Monaco Pull 128mm C/C

CASE QTY	50	WEIGHT/CASE	33 lbs
BOX QTY	10	PROJECTION	30mm
LENGTH	189mm	WIDTH	11mm

Available Colors	Item Number
Oil Rubbed Bronze	P-96128.10B
Matte Black	P-96128.BK
Dark Pewter	P-96128.DP
Polished Chrome	P-96128.PC
Rose Gold	P-96128.RG
Satin Nickel	P-96128.SN

P-96160
Monaco Pull 160mm C/C

CASE QTY	50	WEIGHT/CASE	36 lbs
BOX QTY	10	PROJECTION	30mm
LENGTH	221mm	WIDTH	11mm

Available Colors	Item Number
Oil Rubbed Bronze	P-96160.10B
Matte Black	P-96160.BK
Dark Pewter	P-96160.DP
Polished Chrome	P-96160.PC
Rose Gold	P-96160.RG
Satin Nickel	P-96160.SN

Madison Collection

ADA FRIENDLY

K-92230
28mm Square Knob

CASE QTY	250	WEIGHT/CASE	23 lbs
BOX QTY	25	PROJECTION	26mm
LENGTH	28mm	WIDTH	28mm

Available Colors	Item Number
Oil Rubbed Bronze	K-92230.10B
Matte Black	K-92230.BK
Dark Pewter	K-92230.DP
Polished Chrome	K-92230.PC
Rose Gold	K-92230.RG
Satin Nickel	K-92230.SN

K-92430
36x28 Rectangular Knob

CASE QTY	250	WEIGHT/CASE	25 lbs
BOX QTY	25	PROJECTION	26mm
LENGTH	36mm	WIDTH	28mm

Available Colors	Item Number
Oil Rubbed Bronze	K-92430.10B
Matte Black	K-92430.BK
Dark Pewter	K-92430.DP
Polished Chrome	K-92430.PC
Rose Gold	K-92430.RG
Satin Nickel	K-92430.SN

Patented Design

P-93096
Madison Pull 96mm C/C

CASE QTY	250	WEIGHT/CASE	54.5 lbs
BOX QTY	25	PROJECTION	39mm
LENGTH	122mm	WIDTH	13mm

Available Colors	Item Number
Oil Rubbed Bronze	P-93096.10B
Matte Black	P-93096.BK
Dark Pewter	P-93096.DP
Polished Chrome	P-93096.PC
Rose Gold	P-93096.RG
Satin Nickel	P-93096.SN

P-93128
Madison Pull 128mm C/C

CASE QTY	250	WEIGHT/CASE	64 lbs
BOX QTY	25	PROJECTION	39mm
LENGTH	154mm	WIDTH	13mm

Available Colors	Item Number
Oil Rubbed Bronze	P-93128.10B
Matte Black	P-93128.BK
Dark Pewter	P-93128.DP
Polished Chrome	P-93128.PC
Rose Gold	P-93128.RG
Satin Nickel	P-93128.SN

P-93160
Madison Pull 160mm C/C

CASE QTY	200	WEIGHT/CASE	48 lbs
BOX QTY	20	PROJECTION	39mm
LENGTH	186mm	WIDTH	13mm

Available Colors	Item Number
Oil Rubbed Bronze	P-93160.10B
Matte Black	P-93160.BK
Dark Pewter	P-93160.DP
Polished Chrome	P-93160.PC
Rose Gold	P-93160.RG
Satin Nickel	P-93160.SN

PRIDE DÉCOR®

Milan Collection

ADA FRIENDLY ✓

K-92230
28mm Square Knob

CASE QTY	250	WEIGHT/CASE	23 lbs
BOX QTY	25	PROJECTION	26mm
LENGTH	28mm	WIDTH	28mm

Available Colors	Item Number
Oil Rubbed Bronze	K-92230.10B
Matte Black	K-92230.BK
Dark Pewter	K-92230.DP
Polished Chrome	K-92230.PC
Rose Gold	K-92230.RG
Satin Nickel	K-92230.SN

K-92430
36x28 Rectangular Knob

CASE QTY	250	WEIGHT/CASE	25 lbs
BOX QTY	25	PROJECTION	26mm
LENGTH	36mm	WIDTH	28mm

Available Colors	Item Number
Oil Rubbed Bronze	K-92430.10B
Matte Black	K-92430.BK
Dark Pewter	K-92430.DP
Polished Chrome	K-92430.PC
Rose Gold	K-92430.RG
Satin Nickel	K-92430.SN

Patented Design

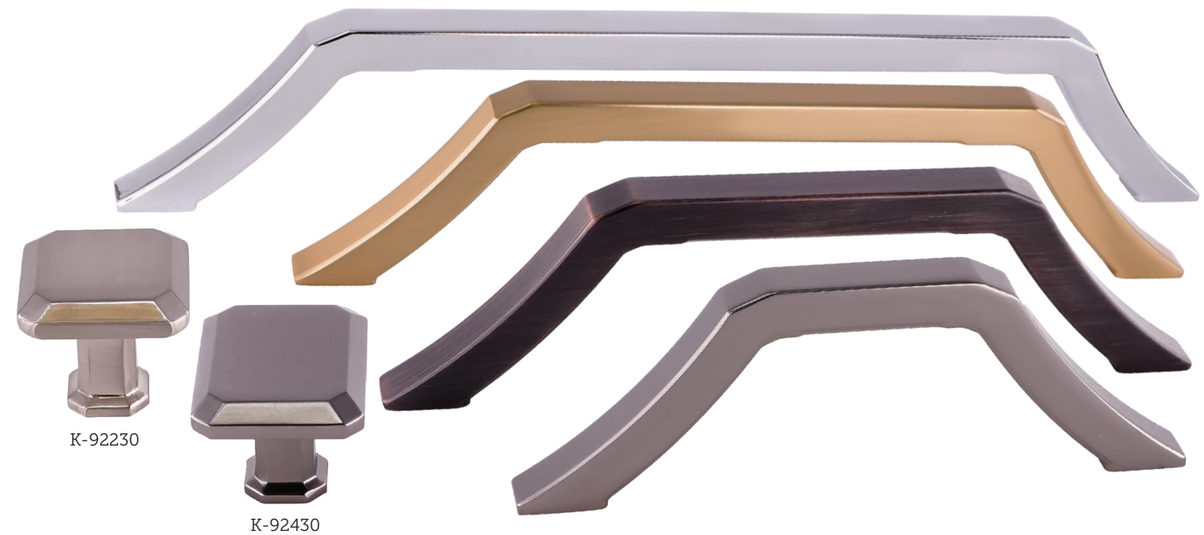

P-94096 ✓
Milan Pull 96mm C/C

CASE QTY	200	WEIGHT/CASE	37 lbs
BOX QTY	20	PROJECTION	39mm
LENGTH	121mm	WIDTH	10mm

Available Colors	Item Number
Oil Rubbed Bronze	P-94096.10B
Matte Black	P-94096.BK
Dark Pewter	P-94096.DP
Polished Chrome	P-94096.PC
Rose Gold	P-94096.RG
Satin Nickel	P-94096.SN

P-94160 ✓
Milan Pull 160mm C/C

CASE QTY	200	WEIGHT/CASE	51 lbs
BOX QTY	20	PROJECTION	39mm
LENGTH	185mm	WIDTH	10mm

Available Colors	Item Number
Oil Rubbed Bronze	P-94160.10B
Matte Black	P-94160.BK
Dark Pewter	P-94160.DP
Polished Chrome	P-94160.PC
Rose Gold	P-94160.RG
Satin Nickel	P-94160.SN

P-94128 ✓
Milan Pull 128mm C/C

CASE QTY	200	WEIGHT/CASE	43 lbs
BOX QTY	20	PROJECTION	39mm
LENGTH	153mm	WIDTH	10mm

Available Colors	Item Number
Oil Rubbed Bronze	P-94128.10B
Matte Black	P-94128.BK
Dark Pewter	P-94128.DP
Polished Chrome	P-94128.PC
Rose Gold	P-94128.RG
Satin Nickel	P-94128.SN

P-94210 ✓
Milan Pull 210mm C/C

CASE QTY	100	WEIGHT/CASE	32 lbs
BOX QTY	25	PROJECTION	39mm
LENGTH	234.5mm	WIDTH	10mm

Available Colors	Item Number
Oil Rubbed Bronze	P-94210.10B
Matte Black	P-94210.BK
Dark Pewter	P-94210.DP
Polished Chrome	P-94210.PC
Rose Gold	P-94210.RG
Satin Nickel	P-94210.SN

Manhattan Collection

K-1218
32mm Round Flat Top

CASE QTY	250	**WEIGHT/CASE**	44 lbs
BOX QTY	25	**PROJECTION**	30mm
DIAMETER	32mm		

Available Colors	Item Number
Oil Rubbed Bronze	K-1218.10B
Matte Black	K-1218.BK
Dark Pewter	K-1218.DP
Polished Chrome	K-1218.PC
Rose Gold	K-1218.RG
Satin Nickel	K-1218.SN

P-92926
Manhattan Pull 96mm C/C

CASE QTY	150	**WEIGHT/CASE**	39.33 lbs
BOX QTY	15	**PROJECTION**	28mm
LENGTH	123mm	**WIDTH**	16mm

Available Colors	Item Number
Oil Rubbed Bronze	P-92926.10B
Matte Black	P-92926.BK
Dark Pewter	P-92926.DP
Polished Chrome	P-92926.PC
Rose Gold	P-92926.RG
Satin Nickel	P-92926.SN

Patented Design

P-92927
Manhattan Pull 128mm C/C

CASE QTY	100	**WEIGHT/CASE**	30.38 lbs
BOX QTY	10	**PROJECTION**	28mm
LENGTH	155mm	**WIDTH**	16mm

Available Colors	Item Number
Oil Rubbed Bronze	P-92927.10B
Matte Black	P-92927.BK
Dark Pewter	P-92927.DP
Polished Chrome	P-92927.PC
Rose Gold	P-92927.RG
Satin Nickel	P-92927.SN

P-92928
Manhattan Pull 160mm C/C

CASE QTY	100	**WEIGHT/CASE**	33 lbs
BOX QTY	10	**PROJECTION**	28mm
LENGTH	187mm	**WIDTH**	16mm

Available Colors	Item Number
Oil Rubbed Bronze	P-92928.10B
Matte Black	P-92928.BK
Dark Pewter	P-92928.DP
Polished Chrome	P-92928.PC
Rose Gold	P-92928.RG
Satin Nickel	P-92928.SN

PRIDE DÉCOR®

Colorado Collection

K-92925
32mm Dia Colorado Round Knob

CASE QTY	250	WEIGHT/CASE	44.88 lbs
BOX QTY	25	PROJECTION	29.5mm
DIAMETER	32mm		

Available Colors	Item Number
Oil Rubbed Bronze	K-92925.10B
Matte Black	K-92925.BK
Dark Pewter	K-92925.DP
Polished Chrome	K-92925.PC
Rose Gold	K-92925.RG
Satin Nickel	K-92925.SN

K-94723
29.8mm Colorado Square Knob

CASE QTY	200	WEIGHT/CASE	39 lbs
BOX QTY	20	PROJECTION	30mm
LENGTH	29.8mm	WIDTH	29.8mm

Available Colors	Item Number
Oil Rubbed Bronze	K-94723.10B
Matte Black	K-94723.BK
Dark Pewter	K-94723.DP
Polished Chrome	K-94723.PC
Rose Gold	K-94723.RG
Satin Nickel	K-94723.SN

Patented Design

K-94727
37mm Colorado Square Oversized Knob

CASE QTY	100	WEIGHT/CASE	27 lbs
BOX QTY	10	PROJECTION	30mm
LENGTH	37mm	WIDTH	37mm

Available Colors	Item Number
Oil Rubbed Bronze	K-94727.10B
Matte Black	K-94727.BK
Dark Pewter	K-94727.DP
Polished Chrome	K-94727.PC
Rose Gold	K-94727.RG
Satin Nickel	K-94727.SN

P-92837
Colorado Pull 128mm C/C

CASE QTY	100	WEIGHT/CASE	35.15 lbs
BOX QTY	10	PROJECTION	30mm
LENGTH	150mm	WIDTH	16mm

Available Colors	Item Number
Oil Rubbed Bronze	P-92837.10B
Matte Black	P-92837.BK
Dark Pewter	P-92837.DP
Polished Chrome	P-92837.PC
Rose Gold	P-92837.RG
Satin Nickel	P-92837.SN

P-92836
Colorado Pull 96mm C/C

CASE QTY	150	WEIGHT/CASE	45.9 lbs
BOX QTY	15	PROJECTION	30mm
LENGTH	118mm	WIDTH	16mm

Available Colors	Item Number
Oil Rubbed Bronze	P-92836.10B
Matte Black	P-92836.BK
Dark Pewter	P-92836.DP
Polished Chrome	P-92836.PC
Rose Gold	P-92836.RG
Satin Nickel	P-92836.SN

P-92838
Colorado Pull 160mm C/C

CASE QTY	100	WEIGHT/CASE	40.55 lbs
BOX QTY	10	PROJECTION	30mm
LENGTH	182mm	WIDTH	16mm

Available Colors	Item Number
Oil Rubbed Bronze	P-92838.10B
Matte Black	P-92838.BK
Dark Pewter	P-92838.DP
Polished Chrome	P-92838.PC
Rose Gold	P-92838.RG
Satin Nickel	P-92838.SN

PRIDE DÉCOR® St. Louis Collection

K-91090

K-91090
St. Louis Knob 33.6x25mm

CASE QTY	250	WEIGHT/CASE	54 lbs
BOX QTY	25	PROJECTION	29mm
LENGTH	33.6mm	WIDTH	33.6mm

Available Colors	Item Number
Oil Rubbed Bronze	K-91090.10B
Rose Gold	K-91090.RG
Satin Nickel	K-91090.SN

K-81361

K-81361
Mushroom Knob 31mm

CASE QTY	250	WEIGHT/CASE	22 lbs
BOX QTY	25	PROJECTION	28mm
DIAMETER	31mm		

Available Colors	Item Number
Oil Rubbed Bronze	K-81361.10B
Matte Black	K-81361.BK
Polished Chrome	K-81361.PC
Rose Gold	K-81361.RG
Satin Nickel	K-81361.SN

P-91496
St. Louis Arch Pull 96mm C/C

CASE QTY	250	WEIGHT/CASE	51 lbs
BOX QTY	25	PROJECTION	26mm
LENGTH	133mm	WIDTH	23mm

Available Colors	Item Number
Oil Rubbed Bronze	P-91496.10B
Satin Nickel	P-91496.SN

P-91497
St. Louis Arch Pull 128mm C/C

CASE QTY	100	WEIGHT/CASE	25 lbs
BOX QTY	25	PROJECTION	26mm
LENGTH	165mm	WIDTH	25mm

Available Colors	Item Number
Oil Rubbed Bronze	P-91497.10B
Satin Nickel	P-91497.SN

P-91498
St. Louis Arch Pull 160mm C/C 195mm OL

CASE QTY	100	WEIGHT/CASE	29 lbs
BOX QTY	25	PROJECTION	26mm
LENGTH	195mm	WIDTH	26mm

Available Colors	Item Number
Oil Rubbed Bronze	P-91498.10B
Satin Nickel	P-91498.SN

PRIDE DÉCOR® Washington Collection

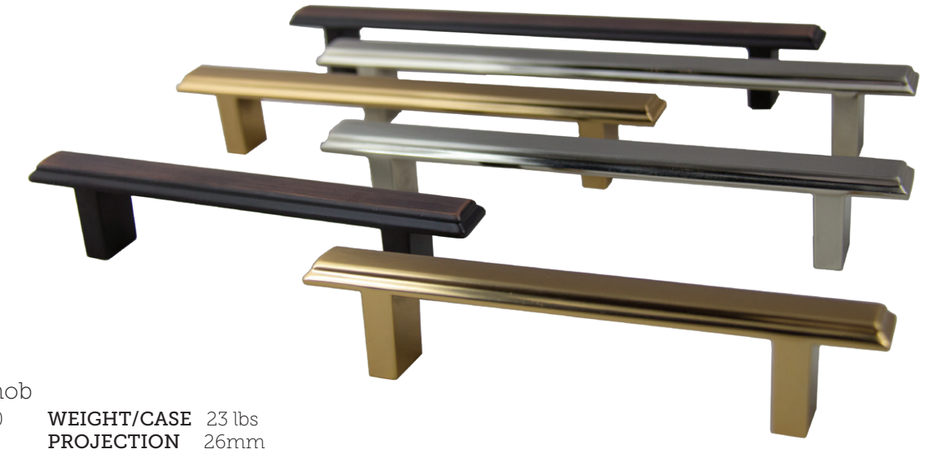

K-92230
28mm Square Knob

CASE QTY	250	WEIGHT/CASE	23 lbs
BOX QTY	25	PROJECTION	26mm
LENGTH	28mm	WIDTH	28mm

Available Colors	Item Number
Oil Rubbed Bronze	K-92230.10B
Matte Black	K-92230.BK
Dark Pewter	K-92230.DP
Polished Chrome	K-92230.PC
Rose Gold	K-92230.RG
Satin Nickel	K-92230.SN

K-92430

K-92230

K-92430
36x28 Rectangular Knob

CASE QTY	250	WEIGHT/CASE	33.5 lbs
BOX QTY	25	PROJECTION	26mm
LENGTH	36mm	WIDTH	28mm

Available Colors	Item Number
Oil Rubbed Bronze	K-92430.10B
Matte Black	K-92430.BK
Dark Pewter	K-92430.DP
Polished Chrome	K-92430.PC
Rose Gold	K-92430.RG
Satin Nickel	K-92430.SN

P-91297
Washington Pull 128mm C/C 168mm OL

CASE QTY	100	WEIGHT/CASE	30.5 lbs
BOX QTY	25	PROJECTION	28mm
LENGTH	168mm	WIDTH	16mm

Available Colors	Item Number
Oil Rubbed Bronze	P-91297.10B
Rose Gold	P-91297.RG
Satin Nickel	P-91297.SN

P-91296
Washington Pull 96mm C/C 136mm OL

CASE QTY	250	WEIGHT/CASE	53.3 lbs
BOX QTY	20	PROJECTION	28mm
LENGTH	136mm	WIDTH	16mm

Available Colors	Item Number
Oil Rubbed Bronze	P-91296.10B
Rose Gold	P-91296.RG
Satin Nickel	P-91296.SN

P-91298
Washington Pull 160mm C/C 200mm OL

CASE QTY	100	WEIGHT/CASE	33 lbs
BOX QTY	25	PROJECTION	28mm
LENGTH	200mm	WIDTH	16mm

Available Colors	Item Number
Oil Rubbed Bronze	P-91298.10B
Rose Gold	P-91298.RG
Satin Nickel	P-91298.SN

PRIDE DÉCOR®

Miami Collection

K-83125
1" Square Knob

CASE QTY	250	**WEIGHT/CASE**	32.9 lbs
BOX QTY	25	**PROJECTION**	23mm
LENGTH	1"	**WIDTH**	1"

Available Colors	Item Number
Oil Rubbed Bronze	K-83125.10B
Matte Black	K-83125.BK
Dark Pewter	K-83125.DP
Polished Chrome	K-83125.PC
Rose Gold	K-83125.RG
Satin Nickel	K-83125.SN

P-81572
Miami Pull 128mm C/C

CASE QTY	250	**WEIGHT/CASE**	56 lbs
BOX QTY	25	**PROJECTION**	27mm
LENGTH	149mm	**WIDTH**	8.5mm

Available Colors	Item Number
Matte Black	P-81572.BK
Dark Pewter	P-81572.DP
Polished Chrome	P-81572.PC
Rose Gold	P-81572.RG
Satin Nickel	P-81572.SN

P-80572
Miami Pull 96mm C/C

CASE QTY	250	**WEIGHT/CASE**	52 lbs
BOX QTY	25	**PROJECTION**	27mm
LENGTH	120mm	**WIDTH**	8.2mm

Available Colors	Item Number
Oil Rubbed Bronze	P-80572.10B
Matte Black	P-80572.BK
Dark Pewter	P-80572.DP
Polished Chrome	P-80572.PC
Rose Gold	P-80572.RG
Satin Nickel	P-80572.SN

P-83572
Miami Pull 160mm C/C

CASE QTY	100	**WEIGHT/CASE**	30.5 lbs
BOX QTY	25	**PROJECTION**	27mm
LENGTH	190mm	**WIDTH**	9mm

Available Colors	Item Number
Matte Black	P-83572.BK
Dark Pewter	P-83572.DP
Polished Chrome	P-83572.PC
Rose Gold	P-83572.RG
Satin Nickel	P-83572.SN

PRIDE DÉCOR®

Square Pull Collection

ADA FRIENDLY ✓

P-87226 ✓
Square Pull 96mm C/C

CASE QTY	250	WEIGHT/CASE	60.5 lbs
BOX QTY	25	PROJECTION	35mm
LENGTH	105.8mm	WIDTH	9.8mm

Available Colors	Item Number
Oil Rubbed Bronze	P-87226.10B
Matte Black	P-87226.BK
Dark Pewter	P-87226.DP
Polished Chrome	P-87226.PC
Rose Gold	P-87226.RG
Satin Nickel	P-87226.SN

P-87227 ✓
Square Pull 128mm C/C

CASE QTY	200	WEIGHT/CASE	56 lbs
BOX QTY	20	PROJECTION	35mm
LENGTH	137mm	WIDTH	9.8mm

Available Colors	Item Number
Oil Rubbed Bronze	P-87227.10B
Matte Black	P-87227.BK
Dark Pewter	P-87227.DP
Polished Chrome	P-87227.PC
Rose Gold	P-87227.RG
Satin Brass	P-87227.SB
Satin Nickel	P-87227.SN

P-87228 ✓
Square Pull 160mm C/C

CASE QTY	100	WEIGHT/CASE	32.8 lbs
BOX QTY	25	PROJECTION	35mm
LENGTH	169.5mm	WIDTH	9.8mm

Available Colors	Item Number
Oil Rubbed Bronze	P-87228.10B
Matte Black	P-87228.BK
Dark Pewter	P-87228.DP
Polished Chrome	P-87228.PC
Rose Gold	P-87228.RG
Satin Nickel	P-87228.SN

P-87229 ✓
Square Pull 192mm C/C

CASE QTY	100	WEIGHT/CASE	37 lbs
BOX QTY	25	PROJECTION	35mm
LENGTH	201.5mm	WIDTH	9.8mm

Available Colors	Item Number
Oil Rubbed Bronze	P-87229.10B
Matte Black	P-87229.BK
Dark Pewter	P-87229.DP
Polished Chrome	P-87229.PC
Rose Gold	P-87229.RG
Satin Nickel	P-87229.SN

P-87300 ✓
Square Pull 224mm C/C

CASE QTY	50	WEIGHT/CASE	20 lbs
BOX QTY	10	PROJECTION	35mm
LENGTH	232.8mm	WIDTH	9.8mm

Available Colors	Item Number
Oil Rubbed Bronze	P-87300.10B
Matte Black	P-87300.BK
Satin Nickel	P-87300.SN

P-87140.SN ✓
Square Pull 280mm C/C Satin Nickel

CASE QTY	100	WEIGHT/CASE	42 lbs
BOX QTY	25	PROJECTION	28mm
LENGTH	289mm	WIDTH	9.8mm

P-87328.SN ✓
Square Pull 320mm C/C Satin Nickel

CASE QTY	100	WEIGHT/CASE	43 lbs
BOX QTY	10	PROJECTION	28mm
LENGTH	329.5mm	WIDTH	9.8mm

Pride Décor® Vail Collection

ADA FRIENDLY

K-1218
32mm Round Flat Top

CASE QTY	250	WEIGHT/CASE	44 lbs
BOX QTY	25	PROJECTION	30mm
DIAMETER	32mm		

Available Colors	Item Number
Oil Rubbed Bronze	K-1218.10B
Matte Black	K-1218.BK
Dark Pewter	K-1218.DP
Polished Chrome	K-1218.PC
Rose Gold	K-1218.RG
Satin Nickel	K-1218.SN

P-86373 ✓
Vail Pull 96mm C/C

CASE QTY	250	WEIGHT/CASE	46 lbs
BOX QTY	25	PROJECTION	30mm
LENGTH	115mm	WIDTH	12mm

Available Colors	Item Number
Oil Rubbed Bronze	P-86373.10B
Matte Black	P-86373.BK
Dark Pewter	P-86373.DP
Polished Chrome	P-86373.PC
Rose Gold	P-86373.RG
Satin Nickel	P-86373.SN

P-86374 ✓
Vail Pull 128mm C/C

CASE QTY	150	WEIGHT/CASE	41 lbs
BOX QTY	25	PROJECTION	30mm
LENGTH	149mm	WIDTH	12mm

Available Colors	Item Number
Oil Rubbed Bronze	P-86374.10B
Matte Black	P-86374.BK
Dark Pewter	P-86374.DP
Polished Chrome	P-86374.PC
Rose Gold	P-86374.RG
Satin Nickel	P-86374.SN

P-86375 ✓
Vail Pull 160mm C/C

CASE QTY	100	WEIGHT/CASE	32.3 lbs
BOX QTY	10	PROJECTION	30mm
LENGTH	180mm	WIDTH	12mm

Available Colors	Item Number
Oil Rubbed Bronze	P-86375.10B
Matte Black	P-86375.BK
Dark Pewter	P-86375.DP
Polished Chrome	P-86375.PC
Rose Gold	P-86375.RG
Satin Nickel	P-86375.SN

Pride Décor® Charlotte Collection

ADA FRIENDLY

K-81091
32mm Square Knob

CASE QTY	250	WEIGHT/CASE	36.5 lbs
BOX QTY	25	PROJECTION	26mm
LENGTH	32mm	WIDTH	32mm

Available Colors	Item Number
Oil Rubbed Bronze	K-81091.10B
Antique Satin Brass	K-81091.ABSB
Satin Pewter	K-81091.APH
Matte Black	K-81091.BK
Weathered Black	K-81091.DACM
Polished Chrome	K-81091.PC
Rose Gold	K-81091.RG
Satin Nickel	K-81091.SN

P-81092 ✓
Charlotte Deco Pull 96mm C/C

CASE QTY	250	WEIGHT/CASE	46.9 lbs
BOX QTY	25	PROJECTION	28mm
LENGTH	118mm	WIDTH	16mm

Available Colors	Item Number
Oil Rubbed Bronze	P-81092.10B
Antique Satin Brass	P-81092.ABSB
Satin Pewter	P-81092.APH
Matte Black	P-81092.BK
Weathered Black	P-81092.DACM
Polished Chrome	P-81092.PC
Rose Gold	P-81092.RG
Satin Nickel	P-81092.SN

P-82092 ✓
Charlotte Deco Pull 128mm C/C

CASE QTY	250	WEIGHT/CASE	52.53 lbs
BOX QTY	25	PROJECTION	28mm
LENGTH	142mm	WIDTH	16mm

Available Colors	Item Number
Oil Rubbed Bronze	P-82092.10B
Matte Black	P-82092.BK
Polished Chrome	P-82092.PC
Rose Gold	P-82092.RG
Satin Nickel	P-82092.SN

P-83092 ✓
Charlotte Deco Pull 160mm C/C

CASE QTY	200	WEIGHT/CASE	49.8 lbs
BOX QTY	20	PROJECTION	28mm
LENGTH	172mm	WIDTH	16mm

Available Colors	Item Number
Oil Rubbed Bronze	P-83092.10B
Matte Black	P-83092.BK
Polished Chrome	P-83092.PC
Rose Gold	P-83092.RG
Satin Nickel	P-83092.SN

PRIDE DÉCOR®

Bar Pull Collection

K-102
Bar Pull Knob 2" OL x 12mm Dia.

CASE QTY	250	**WEIGHT/CASE**	36 lbs
BOX QTY	25	**PROJECTION**	35mm
LENGTH	2"	**WIDTH**	12mm

Available Colors	Item Number
Oil Rubbed Bronze	K-102.10B
Matte Black	K-102.BK
Polished Chrome	K-102.PC
Rose Gold	K-102.RG
Satin Nickel	K-102.SN

P-104
Bar Pull 115mm OL x 64mm C/C x 12mm Dia.

CASE QTY	100	**WEIGHT/CASE**	29.70 lbs
BOX QTY	25	**PROJECTION**	35mm
LENGTH	4 17/32"	**WIDTH**	12mm

Available Colors	Item Number
Matte Black	P-104.BK
Polished Chrome	P-104.PC
Rose Gold	P-104.RG
Satin Nickel	P-104.SN

P-106
Bar Pull 6" OL x 3" C/C x 12mm Dia.

CASE QTY	100	**WEIGHT/CASE**	39.5 lbs
BOX QTY	10	**PROJECTION**	35mm
LENGTH	6"	**WIDTH**	12mm

Available Colors	Item Number
Oil Rubbed Bronze	P-106.10B
Matte Black	P-106.BK
Dark Pewter	P-106.DP
Polished Chrome	P-106.PC
Rose Gold	P-106.RG
Satin Nickel	P-106.SN

P-1096
Bar Pull 6" OL x 96mm C/C x 12mm Dia.

CASE QTY	100	**WEIGHT/CASE**	36 lbs
BOX QTY	10	**PROJECTION**	35mm
LENGTH	6"	**WIDTH**	12mm

Available Colors	Item Number
Oil Rubbed Bronze	P-1096.10B
Matte Black	P-1096.BK
Dark Pewter	P-1096.DP
Polished Chrome	P-1096.PC
Rose Gold	P-1096.RG
Polished Brass	P-1096.PB
Satin Brass	P-1096.SB
Satin Nickel	P-1096.SN
Stainless Steel	P-1096.SS

P-107.SN SATIN NICKEL
Bar Pull 7" OL x 128mm C/C x 12mm Dia.

CASE QTY	100	**WEIGHT/CASE**	40 lbs
BOX QTY	10	**PROJECTION**	35mm
LENGTH	7"	**WIDTH**	12mm

P-108
Bar Pull 8" OL x 5" C/C x 12mm Dia.

CASE QTY	50	**WEIGHT/CASE**	51 lbs
BOX QTY	10	**PROJECTION**	35mm
LENGTH	8"	**WIDTH**	12mm

Available Colors	Item Number	
Oil Rubbed Bronze	P-108.10B	
Matte Black	P-108.BK	*100 Case
Dark Pewter	P-108.DP	
Polished Chrome	P-108.PC	*100 Case
Rose Gold	P-108.RG	
Satin Nickel	P-108.SN	*100 Case

P-109.SN SATIN NICKEL
Bar Pull 9" OL x 160mm C/C x 12mm Dia

CASE QTY	100	**WEIGHT/CASE**	50 lbs
BOX QTY	10	**PROJECTION**	35mm
LENGTH	9"	**WIDTH**	12mm

P-110
Bar Pull 10" OL x 7" C/C x 12mm Dia.

CASE QTY	100	**WEIGHT/CASE**	55.5 lbs
BOX QTY	10	**PROJECTION**	35mm
LENGTH	10"	**WIDTH**	12mm

Available Colors	Item Number	
Oil Rubbed Bronze	P-110.10B	*50 Case
Matte Black	P-110.BK	
Dark Pewter	P-110.DP	*50 Case
Polished Chrome	P-110.PC	
Rose Gold	P-110.RG	*50 Case
Satin Nickel	P-110.SN	

P-112
Bar Pull 12" OL x 9" C/C x 12mm Dia.

CASE QTY	50	**WEIGHT/CASE**	36 lbs
BOX QTY	10	**PROJECTION**	35mm
LENGTH	12"	**WIDTH**	12mm

Available Colors	Item Number
Oil Rubbed Bronze	P-112.10B
Matte Black	P-112.BK
Polished Chrome	P-112.PC
Rose Gold	P-112.RG
Satin Nickel	P-112.SN

PRIDE DÉCOR®

Bar Pull Collection

P-114
Bar Pull 14" OL x 11" C/C x 12mm Dia.

CASE QTY	50	**WEIGHT/CASE**	37.5 lbs
BOX QTY	10	**PROJECTION**	35mm
LENGTH	14"	**WIDTH**	12mm

Available Colors	Item Number
Matte Black	P-114.BK
Rose Gold	P-114.RG
Satin Nickel	P-114.SN

P-116
Bar Pull 16" OL x 13" C/C x 12mm Dia.

CASE QTY	50	**WEIGHT/CASE**	43 lbs
BOX QTY	10	**PROJECTION**	35mm
LENGTH	16"	**WIDTH**	12mm

Available Colors	Item Number
Matte Black	P-116.BK
Oil Rubbed Bronze	P-116.10B
Rose Gold	P-116.RG
Satin Nickel	P-116.SN

P-118.SN SATIN NICKEL
Bar Pull 18" OL x 15" C/C x 12mm Dia.

CASE QTY	50	**WEIGHT/CASE**	66 lbs
BOX QTY	10	**PROJECTION**	35mm
LENGTH	18"	**WIDTH**	12mm

Available Colors	Item Number
Matte Black	P-118.BK

P-120
Bar Pull 20" OL x 17" C/C x 12mm Dia.

CASE QTY	40	**WEIGHT/CASE**	57 lbs
BOX QTY	10	**PROJECTION**	35mm
LENGTH	20"	**WIDTH**	12mm

Available Colors	Item Number
Matte Black	P-120.BK
Oil Rubbed Bronze	P-120.10B
Satin Nickel	P-120.SN

P-122
Bar Pull 22" OL x 19" C/C x 12mm Dia.

CASE QTY	40	**WEIGHT/CASE**	61 lbs
BOX QTY	10	**PROJECTION**	35mm
LENGTH	22"	**WIDTH**	12mm

Available Colors	Item Number
Matte Black	P-122.BK
Satin Nickel	P-122.SN

P-124
Bar Pull 24" OL x 21" C/C x 12mm Dia.

CASE QTY	40	**WEIGHT/CASE**	67 lbs
BOX QTY	10	**PROJECTION**	35mm
LENGTH	24"	**WIDTH**	12mm

Available Colors	Item Number
Oil Rubbed Bronze	P-124.10B
Satin Nickel	P-124.SN

P-126.SN SATIN NICKEL
Bar Pull 26" OL x 23" C/C x 12mm Dia.

CASE QTY	40	**WEIGHT/CASE**	73 lbs
BOX QTY	10	**PROJECTION**	35mm
LENGTH	26"	**WIDTH**	12mm

P-128
Bar Pull 28" OL x 25" C/C x 12mm Dia.

CASE QTY	20	**WEIGHT/CASE**	39 lbs
BOX QTY	10	**PROJECTION**	35mm
LENGTH	28"	**WIDTH**	12mm

Available Colors	Item Number
Satin Nickel	P-128.SN

P-130.SN SATIN NICKEL
Bar Pull 30" OL x 27" C/C x 12mm Dia.

CASE QTY	20	**WEIGHT/CASE**	41 lbs
BOX QTY	10	**PROJECTION**	35mm
LENGTH	30"	**WIDTH**	12mm

PRIDE DÉCOR®

Bar Pull-Stainless Steel

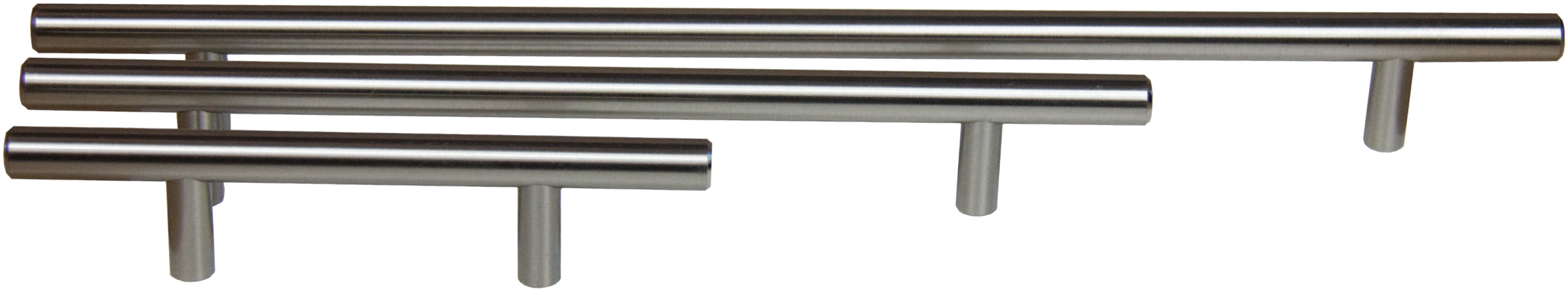

K-102.SS STAINLESS STEEL
Bar Pull Knob 2-3/8" OL x 12mm Dia.

CASE QTY	250	WEIGHT/CASE	36 lbs
BOX QTY	25	PROJECTION	35mm
LENGTH	2-3/8"	WIDTH	12mm

P-105.SS STAINLESS STEEL
Bar Pull 5-1/2" OL x 3" C/C x 12mm Dia.

CASE QTY	100	WEIGHT/CASE	37 lbs
BOX QTY	10	PROJECTION	35mm
LENGTH	5-1/2"	WIDTH	12mm

P-1096.SS STAINLESS STEEL
Bar Pull 6" OL x 96mm C/C x 12mm Dia.

CASE QTY	100	WEIGHT/CASE	39 lbs
BOX QTY	10	PROJECTION	35mm
LENGTH	6"	WIDTH	12mm

P-1096H.BK HOLLOW STAINLESS STEEL MATTE BLACK
Bar Pull 6" OL x 96mm C/C x 12mm Dia.

CASE QTY	200	WEIGHT/CASE	21 lbs
BOX QTY	20	PROJECTION	35mm
LENGTH	6"	WIDTH	12mm

P-1096H.SS HOLLOW STAINLESS STEEL
Bar Pull 6" OL x 96mm C/C x 12mm Dia.

CASE QTY	200	WEIGHT/CASE	22.88 lbs
BOX QTY	20	PROJECTION	35mm
LENGTH	6"	WIDTH	12mm

P-1068H.SS HOLLOW STAINLESS STEEL
Bar Pull 174mm OL x 128mm C/C x 12mm Dia.

CASE QTY	200	WEIGHT/CASE	26 lbs
BOX QTY	20	PROJECTION	35mm
LENGTH	174mm	WIDTH	12mm

P-107.SS STAINLESS STEEL
Bar Pull 7-7/16" OL x 128mm C/C x 12mm Dia.

CASE QTY	100	WEIGHT/CASE	46 lbs
BOX QTY	10	PROJECTION	35mm
LENGTH	7-7/16"	WIDTH	12mm

P-108H.SS HOLLOW STAINLESS STEEL
Bar Pull 8" OL x 128mm C/C x 12mm Dia.

CASE QTY	200	WEIGHT/CASE	27 lbs
BOX QTY	20	PROJECTION	35mm
LENGTH	8"	WIDTH	12mm

P-109.SS STAINLESS STEEL
Bar Pull 9-7/8" OL x 192mm C/C x 12mm Dia.

CASE QTY	100	WEIGHT/CASE	57 lbs
BOX QTY	10	PROJECTION	35mm
LENGTH	9-7/8"	WIDTH	12mm

P-113.SS STAINLESS STEEL
Bar Pull 13-1/4" OL x 256mm C/C x 12mm Dia.

CASE QTY	50	WEIGHT/CASE	61 lbs
BOX QTY	10	PROJECTION	35mm
LENGTH	13-1/4"	WIDTH	12mm

P-115.SS STAINLESS STEEL
Bar Pull 15-3/4" OL x 320mm C/C x 12mm Dia.

CASE QTY	50	WEIGHT/CASE	51 lbs
BOX QTY	10	PROJECTION	35mm
LENGTH	15-3/4"	WIDTH	12mm

P-119.SS STAINLESS STEEL
Bar Pull 19-1/2" OL x 416mm C/C x 12mm Dia

CASE QTY	50	WEIGHT/CASE	66 lbs
BOX QTY	10	PROJECTION	35mm
LENGTH	19-1/2"	WIDTH	12mm

P-122.SS STAINLESS STEEL
Bar Pull 22" OL x 19" C/C x 12mm Dia.

CASE QTY	40	WEIGHT/CASE	61 lbs
BOX QTY	10	PROJECTION	35mm
LENGTH	22"	WIDTH	12mm

P-124.SS STAINLESS STEEL
Bar Pull 24" OL x 21" C/C x 12mm Dia.

CASE QTY	30	WEIGHT/CASE	67 lbs
BOX QTY	10	PROJECTION	35mm
LENGTH	24"	WIDTH	12mm

P-128.SS STAINLESS STEEL
Bar Pull 28" OL x 25" C/C x 12mm Dia.

CASE QTY	20	WEIGHT/CASE	34 lbs
BOX QTY	10	PROJECTION	35mm
LENGTH	28"	WIDTH	12mm

P-133.SS STAINLESS STEEL
Bar Pull 33-1/4" OL x 768mm C/C x 12mm Dia.

CASE QTY	20	WEIGHT/CASE	48 lbs
BOX QTY	10	PROJECTION	35mm
LENGTH	33-1/4"	WIDTH	12mm

Bar Pull Unique Options

P-81837.DN
Curved Bar Pull 128mm C/C Dull Nickel

CASE QTY	250	**WEIGHT/CASE**	56 lbs
BOX QTY	25	**PROJECTION**	26mm
LENGTH	165mm	**WIDTH**	10mm

P-0136
Bar Pull 136mm OL x 3" C/C x 12mm Dia
H=35mm

CASE QTY	100	**WEIGHT/CASE**	33.5 lbs
BOX QTY	10	**PROJECTION**	35mm
LENGTH	136mm	**WIDTH**	12mm

Available Colors	Item Number
Matte Black	P-0136.BK
Satin Nickel	P-0136.SN
Polished Chrome	P-0136.PC

P-0146
Bar Pull 96mm C/C 146mm OL 14mm dia

CASE QTY	100	**WEIGHT/CASE**	46 lbs
BOX QTY	10	**PROJECTION**	35mm
LENGTH	146mm	**WIDTH**	14mm

Available Colors	Item Number
Satin Nickel	P-0146.SN

P-0178
Bar Pull 128mm 178mm OL 14mm Dia

CASE QTY	100	**WEIGHT/CASE**	54 lbs
BOX QTY	10	**PROJECTION**	35mm
LENGTH	178mm	**WIDTH**	14mm

Available Colors	Item Number
Matte Black	P-0178.BK
Satin Nickel	P-0178.SN

P-242.SN
Bar Pull 192mm C/C 242mm OL 14mm Dia
H=36.5mm Satin Nickel

CASE QTY	50	**WEIGHT/CASE**	36 lbs
BOX QTY	10	**PROJECTION**	36.5mm
LENGTH	242mm	**WIDTH**	14mm

P-370.SN
Bar Pull 320mm C/C 370mm OL 14mm Dia
H=36.5mm Satin Nickel

CASE QTY	50	**WEIGHT/CASE**	51 lbs
BOX QTY	10	**PROJECTION**	36.5mm
LENGTH	370mm	**WIDTH**	14mm

Eleganza Collection

P-72276.SN
Bar Pull Square Leg 96mm C/C
136mm OL 14mm Dia

CASE QTY	100	**WEIGHT/CASE**	14 lbs
BOX QTY	20	**PROJECTION**	33mm
LENGTH	136mm	**WIDTH**	14mm

P-72277.SN
Bar Pull Square Leg 128mm C/C
6-5/8" OL Satin Nickel 14mm Dia

CASE QTY	100	**WEIGHT/CASE**	16 lbs
BOX QTY	20	**PROJECTION**	33mm
LENGTH	168mm	**WIDTH**	14mm

P-72278.SN
Bar Pull Square Leg 192mm C/C
9-1/8" OL Satin Nickel 14mm Dia

CASE QTY	100	**WEIGHT/CASE**	19 lbs
BOX QTY	20	**PROJECTION**	33mm
LENGTH	232mm	**WIDTH**	14mm

P-81456
Pull 96mm C/C

CASE QTY	120	WEIGHT/CASE	35 lbs
BOX QTY	20	PROJECTION	26mm
LENGTH	105mm	WIDTH	21mm

Available Colors	Item Number
Oil Rubbed Bronze	P-81456.10B
Matte Black	P-81456.BK
Polished Chrome	P-81456.PC
Rose Gold	P-81456.RG
Satin Nickel	P-81456.SN

P-81458
Pull 128mm C/C

CASE QTY	100	WEIGHT/CASE	41.27 lbs
BOX QTY	25	PROJECTION	30mm
LENGTH	137mm	WIDTH	21mm

Available Colors	Item Number
Oil Rubbed Bronze	P-81458.10B
Matte Black	P-81458.BK
Polished Chrome	P-81458.PC
Rose Gold	P-81458.RG
Satin Nickel	P-81458.SN

ADA FRIENDLY

P-21768
Pull 128mm C/C

CASE QTY	250	WEIGHT/CASE	53.8 lbs
BOX QTY	25	PROJECTION	25mm
LENGTH	145mm	WIDTH	15mm

Available Colors	Item Number
Oil Rubbed Bronze	P-21768.10B
Polished Chrome	P-21768.PC
Rose Gold	P-21768.RG
Satin Nickel	P-21768.SN

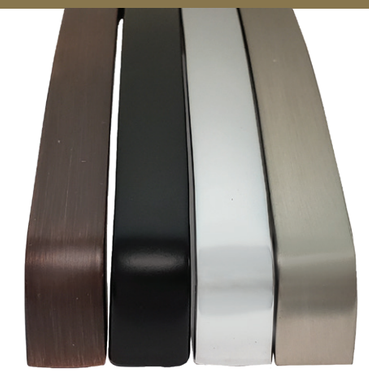

P-82034
Modern Pull 128mm C/C

CASE QTY	250	WEIGHT/CASE	28 lbs
BOX QTY	25	PROJECTION	24mm
LENGTH	138mm	WIDTH	10.6mm

Available Colors	Item Number
Oil Rubbed Bronze	P-82034.10B
Matte Black	P-82034.BK
Polished Chrome	P-82034.PC
Satin Nickel	P-82034.SN

P-82234
Modern Pull 96mm C/C

CASE QTY	200	WEIGHT/CASE	27 lbs
BOX QTY	20	PROJECTION	24mm
LENGTH	106mm	WIDTH	10.6mm

Available Colors	Item Number
Oil Rubbed Bronze	P-82234.10B
Matte Black	P-82234.BK
Polished Chrome	P-82234.PC
Satin Nickel	P-82234.SN

P-81235
Modern Pull 160mm C/C

CASE QTY	250	WEIGHT/CASE	46 lbs
BOX QTY	25	PROJECTION	25mm
LENGTH	170mm	WIDTH	13.5mm

Available Colors	Item Number
Oil Rubbed Bronze	P-81235.10B
Matte Black	P-81235.BK
Polished Chrome	P-81235.PC
Satin Nickel	P-81235.SN

P-82103
Modern Bow Pull 96mm C/C

CASE QTY	250	WEIGHT/CASE	32 lbs
BOX QTY	25	PROJECTION	22.5mm
LENGTH	138mm	WIDTH	15mm

Available Colors	Item Number
Oil Rubbed Bronze	P-82103.10B
Matte Black	P-82103.BK
Polished Chrome	P-82103.PC
Satin Nickel	P-82103.SN

P-82104
Modern Bow Pull 128mm C/C

CASE QTY	250	WEIGHT/CASE	36 lbs
BOX QTY	25	PROJECTION	20.5mm
LENGTH	173mm	WIDTH	16mm

Available Colors	Item Number
Oil Rubbed Bronze	P-82104.10B
Matte Black	P-82104.BK
Polished Chrome	P-82104.PC
Satin Nickel	P-82104.SN

P-82106
Modern Bow Pull 160mm C/C

CASE QTY	150	WEIGHT/CASE	23 lbs
BOX QTY	25	PROJECTION	22mm
LENGTH	206mm	WIDTH	16mm

Available Colors	Item Number
Satin Nickel	P-82106.SN

Modern Collections

P-87216 ✓
Deco Pull 128mm

CASE QTY	250	WEIGHT/CASE	43 lbs
BOX QTY	25	PROJECTION	32mm
LENGTH	144mm	WIDTH	13mm

Available Colors	Item Number
Oil Rubbed Bronze	P-87216.10B
Matte Black	P-87216.BK
Polished Chrome	P-87216.PC
Satin Nickel	P-87216.SN

ADA FRIENDLY ✓

P-87215 ✓
Deco Pull 96mm

CASE QTY	250	WEIGHT/CASE	41 lbs
BOX QTY	25	PROJECTION	32mm
LENGTH	110mm	WIDTH	13mm

Available Colors	Item Number
Oil Rubbed Bronze	P-87215.10B
Matte Black	P-87215.BK
Polished Chrome	P-87215.PC
Satin Nickel	P-87215.SN

P-87218 ✓
Deco Pull 160mm

CASE QTY	100	WEIGHT/CASE	20 lbs
BOX QTY	10	PROJECTION	35mm
LENGTH	175mm	WIDTH	13mm

Available Colors	Item Number
Oil Rubbed Bronze	P-87218.10B
Matte Black	P-87218.BK
Polished Chrome	P-87218.PC
Satin Nickel	P-87218.SN

P-81541
Deco Bow Pull 96mm C/C

CASE QTY	250	WEIGHT/CASE	41 lbs
BOX QTY	25	PROJECTION	27mm
LENGTH	122mm	WIDTH	24mm

Available Colors	Item Number
Oil Rubbed Bronze	P-81541.10B
Polished Chrome	P-81541.PC
Satin Nickel	P-81541.SN

P-81542
Deco Bow Pull 128mm C/C

CASE QTY	250	WEIGHT/CASE	50 lbs
BOX QTY	25	PROJECTION	23mm
LENGTH	154mm	WIDTH	13mm
		FOOT WIDTH	25mm

Available Colors	Item Number
Antique Satin Pewter	P-81542.APH

Arch Pulls Commercial

P-29255.SS
Stainless Steel Pull 128mm C/C with Flat Top Metric Screws

CASE QTY	200	WEIGHT/CASE	45 lbs
BOX QTY	20	PROJECTION	29mm
LENGTH	152mm	WIDTH	10mm

P-50S
Arch Pull 96mm C/C

CASE QTY	200	WEIGHT/CASE	26 lbs
BOX QTY	20	PROJECTION	30mm
LENGTH	117mm	WIDTH	10mm

Available Colors	Item Number
Matte Black	P-50S.BK
Satin Nickel	P-50S.SN

P-50M
Arch Pull 128mm C/C

CASE QTY	200	WEIGHT/CASE	39 lbs
BOX QTY	20	PROJECTION	32mm
LENGTH	155mm	WIDTH	10mm

Available Colors	Item Number
Oil Rubbed Bronze	P-50M.10B
Matte Black	P-50M.BK
Black Nickel	P-50M.BN
Dull Nickel	P-50M.DN
Polished Chrome	P-50M.PC
Satin Chrome	P-50M.SC
Satin Nickel	P-50M.SN

Pride Décor® Charleston Collection

K-92230
28mm Square Knob

CASE QTY	250	WEIGHT/CASE	23 lbs
BOX QTY	25	PROJECTION	26mm
LENGTH	28mm	WIDTH	28mm

Available Colors	Item Number
Oil Rubbed Bronze	K-92230.10B
Matte Black	K-92230.BK
Dark Pewter	K-92230.DP
Polished Chrome	K-92230.PC
Rose Gold	K-92230.RG
Satin Nickel	K-92230.SN

K-92430
36x28 Rectangular Knob

CASE QTY	250	WEIGHT/CASE	25 lbs
BOX QTY	25	PROJECTION	26mm
LENGTH	36mm	WIDTH	28mm

Available Colors	Item Number
Oil Rubbed Bronze	K-92430.10B
Matte Black	K-92430.BK
Dark Pewter	K-92430.DP
Polished Chrome	K-92430.PC
Rose Gold	K-92430.RG
Satin Nickel	K-92430.SN

P-90396
Charleston Cup Pull 96mm C/C & 3" C/C

CASE QTY	150	WEIGHT/CASE	53 lbs
BOX QTY	15	PROJECTION	21mm
LENGTH	118mm	WIDTH	42mm

Available Colors	Item Number
Oil Rubbed Bronze	P-90396.10B
Matte Black	P-90396.BK
Dark Pewter	P-90396.DP
Polished Chrome	P-90396.PC
Rose Gold	P-90396.RG
Satin Nickel	P-90396.SN

Pride Décor® Cup Pull Collection

P-82981
Cup Pull 3" C/C

CASE QTY	200	WEIGHT/CASE	21 lbs
BOX QTY	20	PROJECTION	28mm
LENGTH	88.9mm	WIDTH	32mm

Available Colors	Item Number
Oil Rubbed Bronze	P-82981.10B
Matte Black	P-82981.BK
Dark Pewter	P-82981.DP
Polished Chrome	P-82981.PC
Rose Gold	P-82981.RG
Satin Nickel	P-82981.SN

P-80753
Bin Pull 3" C/C

CASE QTY	250	WEIGHT/CASE	43 lbs
BOX QTY	25	PROJECTION	28mm
LENGTH	4-1/2"	WIDTH	34mm

Available Colors	Item Number
Oil Rubbed Bronze	P-80753.10B
Antique Satin Brass	P-80753.ABSB
Satin Pewter	P-80753.APH
Matte Black	P-80753.BK
Polished Chrome	P-80753.PC
Rose Gold	P-80753.RG
Satin Nickel	P-80753.SN

P-953
Cup Pull 3" C/C

CASE QTY	250	WEIGHT/CASE	28 lbs
BOX QTY	25	PROJECTION	35mm
LENGTH	3-1/2"	WIDTH	43mm

Available Colors	Item Number
Oil Rubbed Bronze	P-953.10B
Matte Black	P-953.BK
Polished Chrome	P-953.PC
Rose Gold	P-953.RG
Satin Nickel	P-953.SN

P-8233
Hooded Cup Pull 3" C/C

CASE QTY	250	WEIGHT/CASE	38 lbs
BOX QTY	25	PROJECTION	24mm
LENGTH	5"	WIDTH	33mm

Available Colors	Item Number
Oil Rubbed Bronze	P-8233.10B
Matte Black	P-8233.BK
Weathered Black	P-8233.DACM
Polished Chrome	P-8233.PC
Antique Silver	P-8233.SIM
Satin Nickel	P-8233.SN

Perfect Edge

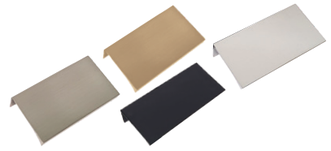

P-1803
46mm C/C x 76mm (3") OL

CASE QTY	500	WEIGHT/CASE	26 lbs
BOX QTY	50	PROJECTION	41mm
LENGTH	76mm	WIDTH	17mm

Available Colors	Item Number
Matte Black	P-1803.BK
Polished Chrome	P-1803.PC
Satin Nickel	P-1803.SN
Satin Gold	P-1803.SG

P-1806
112mm C/C x 152mm (6") OL

CASE QTY	300	WEIGHT/CASE	32.8 lbs
BOX QTY	30	PROJECTION	41mm
LENGTH	152mm	WIDTH	17mm

Available Colors	Item Number
Matte Black	P-1806.BK
Polished Chrome	P-1806.PC
Satin Nickel	P-1806.SN
Satin Gold	P-1806.SG

P-1809
189mm C/C x 229mm (9") OL

CASE QTY	180	WEIGHT/CASE	26 lbs
BOX QTY	30	PROJECTION	41mm
LENGTH	229mm	WIDTH	17mm

Available Colors	Item Number
Matte Black	P-1809.BK
Polished Chrome	P-1809.PC
Satin Nickel	P-1809.SN
Satin Gold	P-1809.SG

P-1812
132mm*2 C/C x 304mm (12") OL

CASE QTY	150	WEIGHT/CASE	30 lbs
BOX QTY	25	PROJECTION	41mm
LENGTH	304mm	WIDTH	17mm

Available Colors	Item Number
Matte Black	P-1812.BK
Polished Chrome	P-1812.PC
Satin Nickel	P-1812.SN
Satin Gold	P-1812.SG

P-1876
Perfect Edge Pull 60mm C/C 76mm OL

CASE QTY	250	WEIGHT/CASE	21.4 lbs
BOX QTY	25	PROJECTION	38mm
LENGTH	76mm	WIDTH	41mm

Available Colors	Item Number
Oil Rubbed Bronze	P-1876.10B
Matte Black	P-1876.BK
Polished Chrome	P-1876.PC
Satin Nickel	P-1876.SN

P-1879
Perfect Edge Pull 128mm C/C 152mm OL

CASE QTY	25	WEIGHT/CASE	38.5 lbs
BOX QTY	250	PROJECTION	38mm
LENGTH	152mm	WIDTH	41mm

Available Colors	Item Number
Matte Black	P-1879.BK
Polished Chrome	P-1879.PC
Satin Nickel	P-1879.SN

P-80014
2" Edge Pull

CASE QTY	250	WEIGHT/CASE	41 lbs
BOX QTY	25	PROJECTION	37mm
LENGTH	37mm	WIDTH	50mm

Available Colors	Item Number
Oil Rubbed Bronze	P-80014.10B
Matte Black	P-80014.BK
Satin Nickel	P-80014.SN

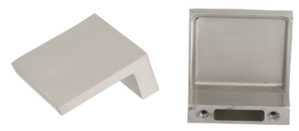

K-1667
Bar Knob 32mm C/C x 48mm

CASE QTY	250	WEIGHT/CASE	48 lbs
BOX QTY	25	PROJECTION	22.4mm
LENGTH	48mm	WIDTH	48mm

Available Colors	Item Number
Oil Rubbed Bronze	K-1667.10B
Polished Chrome	K-1667.PC
Satin Nickel	K-1667.SN

P-80215
Contemporary Pull 96mm C/C

CASE QTY	200	WEIGHT/CASE	41 lbs
BOX QTY	25	PROJECTION	20mm
LENGTH	148mm	WIDTH	17mm

Metric Threads

Available Colors	Item Number
Black Wrinkle Powder	P-80215.BKW
Dull Nickel	P-80215.DN
Satin Nickel	P-80215.SN

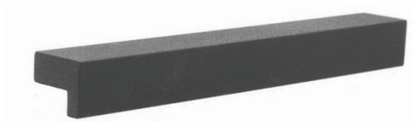

P-80846
Waterfall Pull 96mm C/C x 6-3/4" OL

CASE QTY	250	WEIGHT/CASE	36 lbs
BOX QTY	25	PROJECTION	18mm
LENGTH	6-3/4"	WIDTH	18mm

Available Colors	Item Number
Oil Rubbed Bronze	P-80846.10B
Matte Black	P-80846.BK
Satin Nickel	P-80846.SN

P-80846.128
Waterfall Pull 128mm C/C x 6-3/4" OL

CASE QTY	250	WEIGHT/CASE	41 lbs
BOX QTY	25	PROJECTION	18mm
LENGTH	6-3/4"	WIDTH	18mm

Available Colors	Item Number
Matte Black	P-80846.128.BK
Satin Nickel	P-80846.128.SN

K-86618
65mm Deco Knob

CASE QTY	250	WEIGHT/CASE	46 lbs
BOX QTY	25	PROJECTION	30mm
LENGTH	65mm	WIDTH	18mm

Available Colors	Item Number
Oil Rubbed Bronze	K-86618.10B
Antique Satin Brass	K-86618.ABSB
Satin Pewter	K-86618.APH
Rose Gold	K-86618.RG
Satin Nickel	K-86618.SN

P-86718
Deco Pull 128mm C/C

CASE QTY	250	WEIGHT/CASE	58 lbs
BOX QTY	25	PROJECTION	36mm
LENGTH	145mm	WIDTH	18mm

Available Colors	Item Number
Oil Rubbed Bronze	P-86718.10B
Antique Satin Brass	P-86718.ABSB
Weathered Black	P-86718.DACM
Rose Gold	P-86718.RG
Satin Nickel	P-86718.SN

K-972
30mm Braided Knob

CASE QTY	250	WEIGHT/CASE	31 lbs
BOX QTY	25	PROJECTION	22mm
DIAMETER	30mm		

Available Colors	Item Number
Oil Rubbed Bronze	K-972.10B
Antique Satin Brass	K-972.ABSB
Satin Pewter	K-972.APH
Satin Nickel	K-972.SN

P-81366
Deco Pull 96mm C/C

CASE QTY	250	WEIGHT/CASE	33 lbs
BOX QTY	25	PROJECTION	28mm
LENGTH	118mm	WIDTH	15mm

Available Colors	Item Number
Oil Rubbed Bronze	P-81366.10B
Antique Satin Brass	P-81366.ABSB
Satin Pewter	P-81366.APH
Satin Nickel	P-81366.SN

K-81784
30mm Rope Knob

CASE QTY	250	WEIGHT/CASE	26 lbs
BOX QTY	25	PROJECTION	24mm
DIAMETER	30mm		

Available Colors	Item Number
Oil Rubbed Bronze	K-81784.10B
Weathered Black	K-81784.DACM
Satin Nickel	K-81784.SN

P-81297
Deco Bow Pull 96mm C/C

CASE QTY	250	WEIGHT/CASE	31 lbs
BOX QTY	25	PROJECTION	26mm
LENGTH	120mm	WIDTH	6mm

Available Colors	Item Number
Oil Rubbed Bronze	P-81297.10B
Satin Nickel	P-81297.SN

K-81353
32mm Deco Knob

CASE QTY	250	WEIGHT/CASE	38 lbs
BOX QTY	25	PROJECTION	26mm
DIAMETER	32mm		

Available Colors	Item Number
Satin Nickel	K-81353.SN

P-86765
Deco Pull 3" C/C

CASE QTY	250	WEIGHT/CASE	31 lbs
BOX QTY	25	PROJECTION	27mm
LENGTH	120mm	WIDTH	9mm

Available Colors	Item Number
Oil Rubbed Bronze	P-86765.10B
Antique Satin Brass	P-86765.ABSB
Satin Nickel	P-86765.SN

K-80576
30mm Deco Knob

CASE QTY	250	WEIGHT/CASE	26 lbs
BOX QTY	25	PROJECTION	26mm
DIAMETER	30mm		

Available Colors	Item Number
Oil Rubbed Bronze	K-80576.10B
Antique Satin Brass	K-80576.ABSB
Weathered Black	K-80576.DACM
Satin Nickel	K-80576.SN

P-80008
Deco Pull 3" C/C

CASE QTY	250	WEIGHT/CASE	26 lbs
BOX QTY	25	PROJECTION	23mm
LENGTH	135mm	WIDTH	18mm

Available Colors	Item Number
Oil Rubbed Bronze	P-80008.10B
Satin Pewter	P-80008.APH
Satin Nickel	P-80008.SN

K-82115
32mm Braided Knob

CASE QTY	250	WEIGHT/CASE	31 lbs
BOX QTY	25	PROJECTION	25mm
DIAMETER	32mm		

Available Colors	Item Number
Oil Rubbed Bronze	K-82115.10B
Satin Nickel	K-82115.SN

P-83063
Braided Pull 3" C/C

CASE QTY	250	WEIGHT/CASE	38 lbs
BOX QTY	25	PROJECTION	25mm
LENGTH	120mm	WIDTH	14mm

Available Colors	Item Number
Weathered Black	P-83063.DACM

P-80281
Deco Pull 96mm C/C

CASE QTY	250	WEIGHT/CASE	56 lbs
BOX QTY	25	PROJECTION	32mm
LENGTH	116mm	WIDTH	10mm

Available Colors	Item Number
Oil Rubbed Bronze	P-80281.10B
Satin Pewter	P-80281.APH
Weathered Black	P-80281.DACM
Satin Nickel	P-80281.SN

K-80960
32mm Deco Knob

CASE QTY	250	WEIGHT/CASE	31 lbs
BOX QTY	25	PROJECTION	27mm
DIAMETER	31.6mm		

Available Colors	Item Number
Oil Rubbed Bronze	K-80960.10B
Satin Nickel	K-80960.SN

P-80290
Pull 3" C/C

CASE QTY	250	WEIGHT/CASE	28 lbs
BOX QTY	25	PROJECTION	32mm
LENGTH	85mm	WIDTH	17mm

Available Colors	Item Number
Oil Rubbed Bronze	P-80290.10B
Satin Nickel	P-80290.SN

P-80289
Pull 96mmCC

CASE QTY	250	WEIGHT/CASE	28 lbs
BOX QTY	25	PROJECTION	33mm
LENGTH	108mm	WIDTH	13mm

Available Colors	Item Number
Oil Rubbed Bronze	P-80289.10B
Satin Nickel	P-80289.SN

Pride Décor® Wire Pull Collection

ADA FRIENDLY ✓

P-353
Wire Pull 3"CC

CASE QTY	250	WEIGHT/CASE	34 lbs
BOX QTY	25	PROJECTION	32mm
LENGTH	84.2mm	WIDTH	8mm

Available Colors	Item Number
Oil Rubbed Bronze	P-353.10B
Matte Black	P-353.BK
Polished Brass	P-353.PB
Polished Chrome	P-353.PC
Satin Brass	P-353.SB
Satin Chrome	P-353.SC
Satin Nickel	P-353.SN
Stainless Steel	P-353.SS
White	P-353.WT

P-354
Wire Pull 3-1/2"CC

CASE QTY	250	WEIGHT/CASE	33 lbs
BOX QTY	25	PROJECTION	32mm
LENGTH	88.9mm	WIDTH	8mm

Available Colors	Item Number
Oil Rubbed Bronze	P-354.10B
Matte Black	P-354.BK
Polished Chrome	P-354.PC
Satin Chrome	P-354.SC
Satin Nickel	P-354.SN

P-356 ✓
Wire Pull 5"CC

CASE QTY	250	WEIGHT/CASE	43 lbs
BOX QTY	25	PROJECTION	32mm
LENGTH	135mm	WIDTH	8mm

Available Colors	Item Number
Satin Chrome	P-356.SC
Stainless Steel	P-356.SS

P-396 ✓
Wire Pull 96mm CC

CASE QTY	250	WEIGHT/CASE	36 lbs
BOX QTY	25	PROJECTION	32mm
LENGTH	104mm	WIDTH	8mm

Available Colors	Item Number
Oil Rubbed Bronze	P-396.10B
Matte Black	P-396.BK
Polished Brass	P-396.PB
Polished Chrome	P-396.PC
Satin Brass	P-396.SB
Satin Chrome	P-396.SC
Satin Nickel	P-396.SN
Stainless Steel	P-396.SS

P-355 ✓
Wire Pull 4"CC

CASE QTY	250	WEIGHT/CASE	39 lbs
BOX QTY	25	PROJECTION	32mm
LENGTH	110mm	WIDTH	8mm

Available Colors	Item Number
Oil Rubbed Bronze	P-355.10B
Aluminum	P-355.AL
Matte Black	P-355.BK
Black Nickel	P-355.BN
Polished Brass	P-355.PB
Polished Chrome	P-355.PC
Satin Brass	P-355.SB
Satin Chrome	P-355.SC
Satin Nickel	P-355.SN
Stainless Steel	P-355.SS
White	P-355.WT

Pride Décor® Knob Options

K-971
1-3/8" Knob

CASE QTY	250	WEIGHT/CASE	33 lbs
BOX QTY	25	PROJECTION	25mm
DIAMETER	35mm		

Available Colors	Item Number
Oil Rubbed Bronze	K-971.10B
Antique Copper Machined	K-971.ACM
Matte Black	K-971.BK
Polished Chrome	K-971.PC
Rose Gold	K-971.RG
Antique Silver	K-971.SIM
Satin Nickel	K-971.SN

K-970
30mm Rope Knob

CASE QTY	250	WEIGHT/CASE	33 lbs
BOX QTY	25	PROJECTION	26mm
DIAMETER	30mm		

Available Colors	Item Number
Oil Rubbed Bronze	K-970.10B
Antique Silver	K-970.SIM
Satin Nickel	K-970.SN

K-80980
32mm Knob

CASE QTY	250	WEIGHT/CASE	36 lbs
BOX QTY	25	PROJECTION	24mm
DIAMETER	31.6mm		

Available Colors	Item Number
Oil Rubbed Bronze	K-80980.10B
Weathered Black	K-80980.DACM
Polished Chrome	K-80980.PC
Satin Nickel	K-80980.SN

K-928
31mm Knob

CASE QTY	250	WEIGHT/CASE	42 lbs
BOX QTY	25	PROJECTION	26mm
DIAMETER	31mm	WIDTH	31mm

Available Colors	Item Number
Oil Rubbed Bronze	K-928.10B
Polished Chrome	K-928.PC
Satin Nickel	K-928.SN

Knob Options

K-910
30mm Mushroom Knob

CASE QTY	250	WEIGHT/CASE	33 lbs
BOX QTY	25	PROJECTION	28mm
DIAMETER	30mm		

Available Colors	Item Number
Oil Rubbed Bronze	K-910.10B
Antique Brass	K-910.AB
Matte Black	K-910.BK
Black Nickel	K-910.BN
Weathered Black	K-910.DACM
Dark Pewter	K-910.DP
Polished Brass	K-910.PB
Polished Chrome	K-910.PC
Rose Gold	K-910.RG
Satin Brass	K-910.SB
Satin Chrome	K-910.SC
Satin Nickel	K-910.SN
White	K-910.WT

K-910H
30mm Island Knob

CASE QTY	250	WEIGHT/CASE	14.5 lbs
BOX QTY	25	PROJECTION	28mm
DIAMETER	30mm		

Available Colors	Item Number
Oil Rubbed Bronze	K-910H.10B
Polished Chrome	K-910H.PC
Satin Nickel	K-910H.SN

K-810.SN
Mini Mushroom Knob 25mm Dia H=24.4mm
with 1-1/4" screw

CASE QTY	250	WEIGHT/CASE	18 lbs
BOX QTY	25	PROJECTION	24.4mm
DIAMETER	25mm		

K-6361.SN
31mm Knob Satin Nickel

CASE QTY	250	WEIGHT/CASE	18 lbs
BOX QTY	25	PROJECTION	23mm
DIAMETER	31mm		

K-83991
1-5/8" Football Knob

CASE QTY	250	WEIGHT/CASE	61 lbs
BOX QTY	25	PROJECTION	41mm
LENGTH	41mm	WIDTH	23mm

Available Colors	Item Number
Oil Rubbed Bronze	K-83991.10B
Matte Black	K-83991.BK
Weathered Black	K-83991.DACM
Satin Nickel	K-83991.SN

K-82980
1-1/4" Diecast Knob Satin Nickel

CASE QTY	250	WEIGHT/CASE	44 lbs
BOX QTY	25	PROJECTION	29mm
DIAMETER	32mm		

Available Colors	Item Number
Matte Black	K-82980.BK
Polished Chrome	K-82980.PC
Satin Nickel	K-82980.SN

K-81021.SN
22x40mm 16mm C/C Rectangular Knob
Satin Nickel W/1-3/4" Breakaway Screw

CASE QTY	250	WEIGHT/CASE	21 lbs
BOX QTY	25	PROJECTION	19mm
LENGTH	40mm	WIDTH	22mm

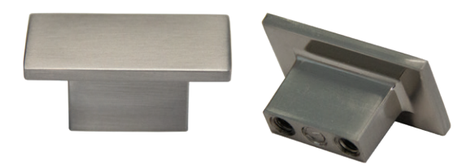

K-3910
30.2mm Knob

CASE QTY	250	WEIGHT/CASE	34 lbs
BOX QTY	25	PROJECTION	29mm
DIAMETER	30.2mm		

Available Colors	Item Number
Oil Rubbed Bronze	K-3910.10B
Polished Chrome	K-3910.PC
Satin Nickel	K-3910.SN

K-7141.SN
1-1/4 Knob Satin Nickel W/O screws Bulk Pack

CASE QTY	250	WEIGHT/CASE	12 lbs
BOX QTY	BULK	PROJECTION	21mm
DIAMETER	31.7mm		

Arched Pull Residential

P-4655
Bow Pull 128mm CC

CASE QTY	250	**WEIGHT/CASE**	38 lbs
BOX QTY	25	**PROJECTION**	32mm
LENGTH	160mm	**WIDTH**	6mm

Available Colors	Item Number
Matte Black	P-4655.BK
Satin Nickel	P-4655.SN

P-8731.SN
Wave Pull 96mm CC Satin Nickel

CASE QTY	250	**WEIGHT/CASE**	33 lbs
BOX QTY	25	**PROJECTION**	24mm
LENGTH	130mm	**WIDTH**	7mm

P-81065.SN
Pull 128mm CC

CASE QTY	120	**WEIGHT/CASE**	26.5 lbs
BOX QTY	25	**PROJECTION**	25.5mm
LENGTH	156.6mm	**WIDTH**	10.5mm

P-A012.SN
45mm Oval Pull 16mm CC Satin Nickel

CASE QTY	120	**WEIGHT/CASE**	41 lbs
BOX QTY	20	**PROJECTION**	29mm
LENGTH	160mm	**WIDTH**	19mm

P-7166.SN
Bow Pull 96mm CC Satin Nickel

CASE QTY	250	**WEIGHT/CASE**	29.20 lbs
BOX QTY	25	**PROJECTION**	28mm
LENGTH	116mm	**WIDTH**	5mm

P-888.SN
Contemporary Pull 128mm CC Satin Nickel

CASE QTY	250	**WEIGHT/CASE**	23 lbs
BOX QTY	25	**PROJECTION**	26mm
LENGTH	155mm	**WIDTH**	7mm

P-81145
Arch Pull Flat Top 128mm CC

CASE QTY	250	**WEIGHT/CASE**	41 lbs
BOX QTY	25	**PROJECTION**	27mm
LENGTH	154mm	**WIDTH**	14mm

Available Colors	Item Number
Matte Black	P-81145.BK
Dull Nickel	P-81145.DN

Pride Décor Pull Options

P-092910
Dimpled Pull 128mm CC

CASE QTY	250	WEIGHT/CASE	48 lbs
BOX QTY	25	PROJECTION	29mm
LENGTH	158mm	WIDTH	16mm

Available Colors	Item Number
Satin Nickel	P-092910.SN

P-80814
Pull 96mm CC

CASE QTY	250	WEIGHT/CASE	27 lbs
BOX QTY	25	PROJECTION	22mm
LENGTH	127mm	WIDTH	11mm

Available Colors	Item Number
Oil Rubbed Bronze	P-80814.10B
Satin Nickel	P-80814.SN

P-8004.SN
4-7/8" OL 96mm C/C Pull Satin Nickel

CASE QTY	250	WEIGHT/CASE	27 lbs
BOX QTY	25	PROJECTION	27mm
LENGTH	125mm	WIDTH	9.5mm

P-675.BK/SS
Recessed Pull with Stainless Steel Face

CASE QTY	250	WEIGHT/CASE	23 lbs
BOX QTY	25	PROJECTION	-23mm
LENGTH	114mm	WIDTH	32mm

Recess is 32mm x 98mm

P-847
Pull 3" CC

CASE QTY	250	WEIGHT/CASE	33 lbs
BOX QTY	25	PROJECTION	28mm
LENGTH	128mm	WIDTH	12mm

Available Colors	Item Number
Oil Rubbed Bronze	P-847.10B
Satin Nickel	P-847.SN

P-433
Pull 3" CC

CASE QTY	250	WEIGHT/CASE	21 lbs
BOX QTY	25	PROJECTION	20mm
LENGTH	128mm	WIDTH	11mm

Available Colors	Item Number
Oil Rubbed Bronze	P-433.10B

Pride Décor Furniture Pulls

K-82142.SN
Knob with Finger Pull 20x26mm

CASE QTY	250	WEIGHT/CASE	18 lbs
BOX QTY	25	PROJECTION	26mm
LENGTH	26mm	WIDTH	20mm

Pride Décor® Mission Pulls & Knobs

P-1011.BK
Mission Pull 3" CC Matte Black

CASE QTY	200	WEIGHT/CASE	56 lbs
BOX QTY	20	PROJECTION	42mm
LENGTH	96mm	WIDTH	9mm

K-1012.BK
Mission Knocker Matte Black

CASE QTY	250	WEIGHT/CASE	33 lbs
BOX QTY	25	PROJECTION	60mm
LENGTH	48mm	WIDTH	96mm

K-7141.BLAE
1-1/4 Knob Antique Black W/O screws Bulk Pack

CASE QTY	250	WEIGHT/CASE	18 lbs
BOX QTY	BULK	PROJECTION	21mm
DIAMETER	31.7mm		

Pride Décor® Hooks

CH-1003.PC
Single Coat Hook Polished Chrome

CASE QTY	250	WEIGHT/CASE	18 lbs
BOX QTY	25	PROJECTION	41.5mm
LENGTH	38mm	WIDTH	31mm

CH-8363.PC
Side by Side Double Coat Hook Polished Chrome

CASE QTY	250	WEIGHT/CASE	26 lbs
BOX QTY	25	PROJECTION	30mm
LENGTH	32mm	WIDTH	56mm

CH-81160.BK
Vertical Double Coat Hook Matte Black

CASE QTY	250	WEIGHT/CASE	26 lbs
BOX QTY	25	PROJECTION	78.5mm
LENGTH	30mm	WIDTH	56mm

CH-81160.PC
Vertical Double Coat Hook Polished Chrome

CASE QTY	250	WEIGHT/CASE	26 lbs
BOX QTY	25	PROJECTION	78.5mm
LENGTH	30mm	WIDTH	56mm

Pride Décor® Closet Rods

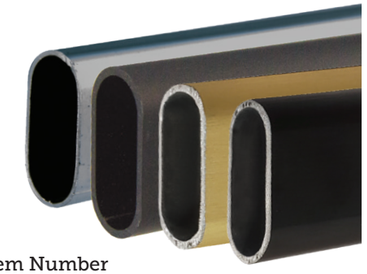

CR-50
Closet Rod 8 Ft Oval
30mm x 15mm x 1.0mm
8′ 1mm

Available Colors	Item Number
Chrome Plated	CR-50.CP (Case: 10 Steel)
Matte Black	CR-50.BK (Case: 10 Steel)
Satin Nickel	CR-50.SN (Case: 10 Steel)

CR-51.CP
Closet Rod 12 Ft Oval
30mm x 15mm x 1.0mm Steel Chrome Plated
12′ 1mm

Available Colors	Item Number
Chrome Plated	CR-51.CP (Case: 10)

CR-52
Closet Rod 8 Ft Oval
30mm x 15mm x 1.5mm Aluminum
8′ 1.5mm

Available Colors	Item Number
Satin Brass	CR-52.SB (Case: 20)
Oil Rubbed Bronze	CR-52.ORB (Case: 20 Alum)

CR-75.CP
Closet Rod 6 Ft Round
1-1/16 Dia x 1.2mm Steel Chrome Plated
6′ 1-1/16 Dia 1.2mm

Available Colors	Item Number
Chrome Plated	CR-75.CP (Case: 10)

CR-70
Closet Rod 8 Ft Round
1-1/16 Dia x 1.2mm Steel Chrome Plated
8′ 1-1/16 Dia 1.2mm

Available Colors	Item Number
Chrome Plated	CR-70.CP (Case: 10)
Matte Black	CR-70.BK (Case: 10)
Satin Nickel	CR-70.SN (Case: 10)

CR-77.CP
Closet Rod 10 Ft Round
1-1/16 Dia x 1.2mm Steel Chrome Plated
10′ 1-1/16 Dia 1.2mm

Available Colors	Item Number
Chrome Plated	CR-77.CP (Case: 10)

CR-72.CP
Closet Rod 12 Ft Round
1-1/16 Dia x 1.2mm Steel Chrome Plated
12′ 1-1/16 Dia 1.2mm

Available Colors	Item Number
Chrome Plated	CR-72.CP (Case: 10)

CR-71.CP
Closet Rod 8 Ft Round Heavy Duty
1-1/16 Dia x 2.0mm Steel Chrome Plated
8′ 1-1/16 Dia 2mm

Available Colors	Item Number
Chrome Plated	CR-71.CP (Case: 5)

CR-73.CP
Closet Rod 12 Ft Round Heavy Duty
1-1/16 Dia x 2.0mm Steel Chrome Plated
12′ 1-1/16 Dia 2mm

Available Colors	Item Number
Chrome Plated	CR-73.CP (Case: 5)

CR-60.CP
Closet Rod 8 Ft Round
1-1/4 Dia x 1.2mm Steel Chrome Plated
8′ 1-1/4 Dia 1.2mm

Available Colors	Item Number
Chrome Plated	CR-60.CP (Case: 10)

CR-62.CP
Closet Rod 12 Ft Round
1-1/4 Dia x 1.2mm Steel Chrome Plated
12′ 1-1/4 Dia 1.2mm

Available Colors	Item Number
Chrome Plated	CR-62.CP (Case: 10)

CR-80
Closet Rod 8 Ft Round Heavy Duty
1-5/16 Dia x 2.0mm
8′ 1-5/16 Dia 2mm

Available Colors	Item Number
Chrome Plated	CR-80.CP (Case: 5 Steel)
Oil Rubbed Bronze	CR-80.ORB (Case: 20 Alum)
Matte Black	CR-80.BK (Case: 5 Steel)
Satin Nickel	CR-80.SN (Case: 5 Steel)
Satin Brass	CR-80.SB (Case: 20 Alum)

CR-81.CP
Closet Rod 12 Ft Round Heavy Duty
1-5/16 Dia x 2.0mm Steel Chrome Plated
12′ 1-5/16 Dia 2mm

Available Colors	Item Number
Chrome Plated	CR-81.CP (Case: 5)

Pride Décor® Closet Rod Fittings

FOR

CRCS-58
Closet Rod Oval Center Support

Available Colors	Item Number	
Oil Rubbed Bronze	CRCS-58.ORB	Box: 50
Matte Black	CRCS-58.BK	Box: 50
Chrome Plated	CRCS-58.CP	Box: 50
Satin Brass	CRCS-58.SB	Box: 50
Satin Nickel	CRCS-58.SN	Box: 50

FOR 1-1/4 Dia

CRCS-68.CP
Closet Rod 1-1/4 Round Center Support

Available Colors	Item Number	
Chrome Plated	CRCS-68.CP	Box: 20

FOR

CRS-54
Closet Rod Oval Socket Screw On

Available Colors	Item Number	
Oil Rubbed Bronze	CRS-54.ORB	Box: 100
Matte Black	CRS-54.BK	Box: 100
Chrome Plated	CRS-54.CP	Box: 100
Satin Brass	CRS-54.SB	Box: 100
Satin Nickel	CRS-54.SN	Box: 100

FOR

CRS-56
Closet Rod Oval Socket w/ 5mm Pins

Available Colors	Item Number	
Oil Rubbed Bronze	CRS-56.ORB	Box: 100
Matte Black	CRS-56.BK	Box: 100
Chrome Plated	CRS-56.CP	Box: 100
Satin Brass	CRS-56.SB	Box: 100
Satin Nickel	CRS-56.SN	Box: 100

FOR 1-1/4 Dia

CRS-64.CP
Closet Rod 1-1/4 Round Socket Open End

Available Colors	Item Number	
Chrome Plated	CRS-64.CP	Box: 50

FOR 1-1/4 Dia

CRS-66.CP
Closet Rod 1-1/4 Round Socket Closed

Available Colors	Item Number	
Chrome Plated	CRS-66.CP	Box: 50

Pride Décor — Closet Rod Fittings

FOR 1-1/16 Dia

CRS-74
Closet Rod 1-1/16 Round Socket Open End

Available Colors	Item Number	
Chrome Plated	CRS-74.CP	Box: 50
Matte Black	CRS-74.BK	Box: 50
Satin Nickel	CRS-74.SN	Box: 50

FOR 1-1/16 Dia

CRS-76
Closet Rod 1-1/16 Round Socket Closed

Available Colors	Item Number	
Chrome Plated	CRS-76.CP	Box: 50
Matte Black	CRS-76.BK	Box: 50
Satin Nickel	CRS-76.SN	Box: 50

FOR 1-5/16 Dia

CRS-84
Closet Rod 1-5/16 Round Socket Open End

Available Colors	Item Number	
Oil Rubbed Bronze	CRS-84.ORB	Box: 20
Chrome Plated	CRS-84.CP	Box: 20
Matte Black	CRS-84.BK	Box: 20
Satin Nickel	CRS-84.SN	Box: 20

FOR 1-5/16 Dia

CRS-85
Closet Rod 1-5/16 Round Socket Closed

Available Colors	Item Number	
Oil Rubbed Bronze	CRS-85.ORB	Box: 20
Chrome Plated	CRS-85.CP	Box: 20
Matte Black	CRS-85.BK	Box: 20
Satin Nickel	CRS-85.SN	Box: 20

FOR 1-1/16 Dia

CRCS-78
Closet Rod 1-1/16 Round Center Support

Available Colors	Item Number	
Chrome Plated	CRCS-78.CP	Box: 25
Matte Black	CRCS-78.BK	Box: 25

FOR 1-5/16 Dia

CRCS-88
Closet Rod 1-5/16 Round Center Support

Available Colors	Item Number	
Chrome Plated	CRCS-88.CP	Box: 25
Oil Rubbed Bronze	CRCS-88.ORB	Box: 25

FOR 1-5/16 Dia

CRS-86
Closet Rod 1-5/16 Round Socket w/ 5mm Pins Open End

Available Colors	Item Number	
Oil Rubbed Bronze	CRS-86.ORB	Box: 50
Chrome Plated	CRS-86.CP	Box: 50

FOR 1-5/16 Dia

CRS-87
Closet Rod 1-5/16 Round Socket w/ 5mm Pins Closed

Available Colors	Item Number	
Oil Rubbed Bronze	CRS-87.ORB	Box: 50
Chrome Plated	CRS-87.CP	Box: 50

Pride Décor — Adjustable Closet Rods

NEW PRODUCT

CRADJ1830
Adjustable Closet Rod 18"x30"

Available Colors	Item Number	
Matte Black	CRADJ1830.BK	Case: 10
White	CRADJ1830.WT	Case: 10
Zinc Plated	CRADJ1830.ZP	Case: 10

CRADJ3048
Adjustable Closet Rod 30"x48"

Available Colors	Item Number	
Matte Black	CRADJ3048.BK	Case: 10
White	CRADJ3048.WT	Case: 10
Zinc Plated	CRADJ3048.ZP	Case: 10

CRADJ4872
Adjustable Closet Rod 48"x72"

Available Colors	Item Number	
Matte Black	CRADJ4872.BK	Case: 10
White	CRADJ4872.WT	Case: 10
Zinc Plated	CRADJ4872.ZP	Case: 10

CRADJ7296
Adjustable Closet Rod 72"x96"

Available Colors	Item Number	
Matte Black	CRADJ7296.BK	Case: 10
White	CRADJ7296.WT	Case: 10
Zinc Plated	CRADJ7296.ZP	Case: 10

CRADJ96150
Adjustable Closet Rod 96"x150"

Available Colors	Item Number	
Matte Black	CRADJ96150.BK	Case: 10
White	CRADJ96150.WT	Case: 10
Zinc Plated	CRADJ96150.ZP	Case: 10

Pride Décor — Adjustable Pull Down Closet Rods

COMING SOON

CRPD
Adjustable Pull Down Closet Rods

- Designed for closet cabinets and storage systems
- Available in three horizontally adjustable sizes:
  - CRPD2127 21" – 27"
  - CRPD2635 26" – 35"
  - CRPD3547 35" – 47"
- Integrated soft-close system for smooth, controlled operation
- Includes an adjustable pull rod, extending from 24" to 37-1/2"
- Mounts securely to the inside of the cabinet box
- Fasteners included for easy installation

PRIDE INDUSTRIAL
DECORATIVE HARDWARE
FUNCTIONAL HARDWARE
& MORE

DECORATIVE WOOD

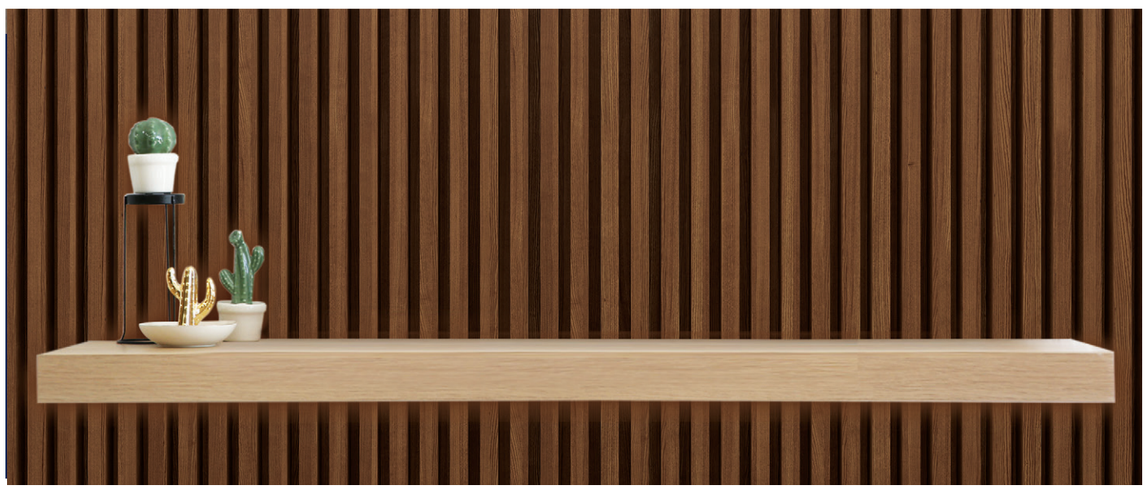

PRIDE INDUSTRIAL®
DECORATIVE HARDWARE
FUNCTIONAL HARDWARE
& MORE

FLOATING SHELVES

Maple

Walnut

White Oak

Floating Shelf With 2 pcs brackets

FSM1012

Weight	6.05 lbs
Width	10″
Length	12″
Thickness	2.5″
Wt. Capacity	22.5 lbs

FSWALNUT12

Weight	5.17 lbs
Width	10″
Length	12″
Thickness	2.5″
Wt. Capacity	22.5 lbs

FSWTOAK12

Weight	4.84 lbs
Width	10″
Length	12″
Thickness	2.5″
Wt. Capacity	22.5 lbs

FSM1024

Weight	8.91 lbs
Width	10″
Length	24″
Thickness	2.5″
Wt. Capacity	30 lbs

FSWALNUT24

Weight	8.58 lbs
Width	10″
Length	24″
Thickness	2.5″
Wt. Capacity	30 lbs

FSWTOAK24

Weight	8.25 lbs
Width	10″
Length	24″
Thickness	2.5″
Wt. Capacity	30 lbs

FSM1030

Weight	10.4 lbs
Width	10″
Length	30″
Thickness	2.5″
Wt. Capacity	37.5 lbs

FSWALNUT30

Weight	10.45 lbs
Width	10″
Length	30″
Thickness	2.5″
Wt. Capacity	37.5 lbs

FSWTOAK30

Weight	10.45 lbs
Width	10″
Length	30″
Thickness	2.5″
Wt. Capacity	37.5 lbs

Floating Shelf With 3 pcs brackets

FSM1036

Weight	12 lbs
Width	10″
Length	36″
Thickness	2.5″
Wt. Capacity	45 lbs

FSWALNUT36

Weight	12.43 lbs
Width	10″
Length	36″
Thickness	2.5″
Wt. Capacity	45 lbs

FSWTOAK36

Weight	12.10 lbs
Width	10″
Length	36″
Thickness	2.5″
Wt. Capacity	45 lbs

FSM1042

Weight	14.96 lbs
Width	10″
Length	42″
Thickness	2.5″
Wt. Capacity	52.5 lbs

FSWALNUT42

Weight	14.08 lbs
Width	10″
Length	42″
Thickness	2.5″
Wt. Capacity	52.5 lbs

FSWTOAK42

Weight	13.86 lbs
Width	10″
Length	42″
Thickness	2.5″
Wt. Capacity	52.5 lbs

FSBRKT
Brackets with screws for Floating Shelves
Weight 0.33lbs each

CORBEL-KL-
Craftsman Corbel
13.75 x 8 x 5

Species	Item Number
Maple	CORBEL-KL-MP
Rubberwood	CORBEL-KL-RW

CORBEL-K-
Craftsman Corbel
10 x 7 x 3.5

Species	Item Number
Alder	CORBEL-K-AL
Rubberwood	CORBEL-K-RW

CORBEL-A-15-
Contemp Corbel
10.1 x 3.75 x 5.375

Species	Item Number
Rubberwood	CORBEL-A-15-RW

CORBEL-M-13-
Shaker Corbel
9 x 4.1 x 3.15

Species	Item Number
Rubberwood	CORBEL-M-13-RW

POST-K-
Square Fluted Post
35.25 x 3.5 x 3.5

Species	Item Number
Maple	POST-K-MP
Rubberwood	POST-K-RW

POST-K-5X42-
Square Fluted Post
42 x 5 x 5

Species	Item Number
Rubberwood	POST-K-5X42-RW

POST-X-
Shaker Post
35.25 x 3.5 x 3.5

Species	Item Number
Rubberwood	POST-X-RW

POST-X-5X42-
Shaker Post
42 x 5 x 5

Species	Item Number
Alder	POST-X-5X42-AL
Maple	POST-X-5X42-MP
Rubberwood	POST-X-5X42-RW

POST-S-
Square Post
35.25 x 3.5 x 3.5

Species	Item Number
Rubberwood	POST-S-RW

POST-S-5X42-
Square Post
42 x 5 x 5

Species	Item Number
Rubberwood	POST-S-5X42-RW

POST-A-H-
Turned Half Post
1-3/4 x 3-1/2 x 35-1/4

Species	Item Number
Alder	POST-A-H-AL
Rubberwood	POST-A-H-RW

POST-B-H-
Reed Half Post
1-3/4 x 3-1/2 x 35-1/4

Species	Item Number
Rubberwood	POST-B-H-RW

POST-C-H-
Rope Half Post
1-3/4 x 3-1/2 x 35-1/4

Species	Item Number
Rubberwood	POST-C-H-RW

POST-G-H-
Tuscan Half Post
3-1/2 x 1-3/4 x 35-1/4

Species	Item Number
Rubberwood	POST-G-H-RW

POST-M-H-
Mission Half Post
3-1/2 x 1-3/4 x 35-1/4

Species	Item Number
Rubberwood	POST-M-H-RW

POST-A-
Turned Post
3-1/2 x 3-1/2 x 35-1/4

Species	Item Number
Maple	POST-A-MP
Rubberwood	POST-A-RW

Also available in 3-1/2" x 3-1/2" x 42"
POST-A-42-(SPECIES)
AL, RW

POST-B-
Reed Post
3-1/2 x 3-1/2 x 35-1/4

Species	Item Number
Maple	POST-B-MP
Rubberwood	POST-B-RW

Also available in 3-1/2" x 3-1/2" x 42"
POST-B-42-(SPECIES)
RO, RW

POST-C-
Rope Post
3-1/2 x 3-1/2 x 35-1/4

Species	Item Number
Alder	POST-C-AL
Rubberwood	POST-C-RW

Also available in 3-1/2" x 3-1/2" x 42"
POST-C-42-(SPECIES)
MP

POST-D-
Tapered Fluted Post
3-3/4 x 3-3/4 x 35-1/4

Species	Item Number
Maple	POST-D-MP
Rubberwood	POST-D-RW

Also available in 3-1/2" x 3-1/2" x 42"
POST-D-42-(Species)
RW

POST-E-
Turned Post
3-3/4 x 3-3/4 x 35-1/4

Species	Item Number
Rubberwood	POST-E-RW

POST-G-
Tuscan Post
3-1/2 x 3-1/2 x 35-1/4

Species	Item Number
Alder	POST-G-AL
Rubberwood	POST-G-RW

POST-T-
Modern Timeless Post
3-1/2" x 3-1/2" x 35-1/2"

Species	Item Number
Maple	POST-T-MP
Rubberwood	POST-T-RW

POST-A-5X36-
Turned Post
5 x 5 x 36

Species	Item Number
Alder	POST-A-5X36-AL
Rubberwood	POST-A-5X36-RW

POST-B-5X36-
Reed Post
5 x 5 x 36

Species	Item Number
Rubberwood	POST-B-5X36-RW

POST-C-5X36-
Rope Post
5 x 5 x 36

Species	Item Number
Rubberwood	POST-C-5X36-RW

PRIDE INDUSTRIAL®
DECORATIVE HARDWARE
FUNCTIONAL HARDWARE
& MORE

POST COLLECTION

POST-F-5X36-
Acanthus Post
5 x 5 x 36

Species	Item Number
Alder	POST-F-5X36-AL
Rubberwood	POST-F-5X36-RW

POST-G-5X36-
Tuscan Post
5 x 5 x 36

Species	Item Number
Alder	POST-G-5X36-AL
Rubberwood	POST-G-5X36-RW

POST-M-5X36-
Mission Post
5 x 5 x 36

Species	Item Number
Maple	POST-M-5X36-MP
Rubberwood	POST-M-5X36-RW

POST-A-5X42-
Turned Post
5 x 5 x 42

Species	Item Number
Red Oak	POST-A-5X42-RO
Rubberwood	POST-A-5X42-RW

CORBEL-M-5-
Small Mission Corbel
4-1/2 x 5 x 10

Species	Item Number
Rubberwood	CORBEL-M-5-RW

CORBEL-M-6-
Medium Mission Corbel
5-1/4 x 7 x 14

Species	Item Number
Rubberwood	CORBEL-M-6-RW

CORBEL-T-1-
Small Traditional Corbel
4-1/2 x 5-1/4 x 10

Species	Item Number
Alder	CORBEL-T-1-AL
Rubberwood	CORBEL-T-1-RW

CORBEL-T-2-
Medium Traditional Corbel
5 x 7 x 14

Species	Item Number
Rubberwood	CORBEL-T-2-RW

CORBEL-M-10-
Small Modern Corbel
4 x 5 x 10

Species	Item Number
Rubberwood	CORBEL-M-10-RW

PRIDE INDUSTRIAL®
DECORATIVE HARDWARE
FUNCTIONAL HARDWARE
& MORE

CORBEL COLLECTION

CORBEL-M-11-
Medium Modern Corbel
5 x 6-1/2 x 14

Species	Item Number
Rubberwood	CORBEL-M-11-RW

CORBEL-M-1-
Small Mission Corbel
2 x 5 x 8

Species	Item Number
Alder	CORBEL-M-1-AL
Maple	CORBEL-M-1-MP
Rubberwood	CORBEL-M-1-RW

CORBEL-M-2-
Medium Mission Corbel
3 x 9 x 12

Species	Item Number
Alder	CORBEL-M-2-AL
Maple	CORBEL-M-2-MP
Rubberwood	CORBEL-M-2-RW

CORBEL-M-4-
Narrow Mission Corbel
2-1/2 x 6-1/2 x 12

Species	Item Number
Rubberwood	CORBEL-M-4-RW

CORBEL-B-
Classic Corbel "B"
1-3/4 x 8-3/8 x 10-7/8

Species	Item Number
Alder	CORBEL-B-AL
Rubberwood	CORBEL-B-RW

CORBEL-C-
Tuscan Corbel "C"
1-3/4 x 8-3/8 x 10-3/4

Species	Item Number
Rubberwood	CORBEL-C-RW

CORBEL-D-
Euro Bar Bracket
1-1/4 x 8 x 12

Species	Item Number
Alder	CORBEL-D-AL
Maple	CORBEL-D-MP
Rubberwood	CORBEL-D-RW

TBS-
Transition Block Short
2-3/4 x 1-7/8 x 6

Species	Item Number
Maple	TBS-MP
Red Oak	TBS-RO
Rubberwood	TBS-RW

TBT-
Transition Block Tall
2-7/8 x 1-7/8 x 9-7/8

Species	Item Number
Alder	TBT-AL
Maple	TBT-MP
Red Oak	TBT-RO
Rubberwood	TBT-RW

CORBEL-A-4-
Acanthus Bar Bracket
3-1/2 x 7-3/4 x 13

Species	Item Number
Rubberwood	CORBEL-A-4-RW

CORBEL-M-8-
Modern Deco Bar Bracket
2-3/4 x 8-11/16 x 12-5/8

Species	Item Number
Rubberwood	CORBEL-M-8-RW

CORBEL-T-7-
Small Modern Craft Corbel
1-3/4 x 5 x 7

Species	Item Number
Alder	CORBEL-T-7-AL
Rubberwood	CORBEL-T-7-RW

PRIDE INDUSTRIAL®
DECORATIVE HARDWARE
FUNCTIONAL HARDWARE
& MORE

CORBEL COLLECTION

CORBEL-T-8-
Medium Modern Craft
1-3/4 x 7-1/4 x 9-1/4

Species	Item Number
Alder	CORBEL-T-8-AL
Maple	CORBEL-T-8-MP
Rubberwood	CORBEL-T-8-RW

CORBEL-T-4-
Traditional Bar Bracket
3-3/8 x 7-3/4 x 13

Species	Item Number
Alder	CORBEL-T-4-AL
Rubberwood	CORBEL-T-4-RW

CORBEL-A-3-
Large Acanthus Corbel
6-3/4 x 7-3/4 x 22

Species	Item Number
Rubberwood	CORBEL-A-3-RW

CORBEL-A-2-
Medium Acanthus Corbel
5 x 7 x 14

Species	Item Number
Maple	CORBEL-A-2-MP
Rubberwood	CORBEL-A-2-RW

CORBEL-A-1-
Small Acanthus Corbel
4-5/8 x 5-1/4 x 10

Species	Item Number
Rubberwood	CORBEL-A-1-RW

CORBEL-BW-1-
Basket Weave Corbel
4-1/2 x 5 x 10

Species	Item Number
Rubberwood	CORBEL-BW-1-RW

CORBEL-A-5-
Low Profile Acanthus Corbel
2-3/4 x 1-3/8 x 6

Species	Item Number
Rubberwood	CORBEL-A-5-RW

CORBEL-A-6-
Low Profile Acanthus Corbel
3-1/2 x 1-1/2 x 8

Species	Item Number
Rubberwood	CORBEL-A-6-RW

CORBEL-A-7-
Low Profile Acanthus Corbel
4-1/2 x 1-3/4 x 10

Species	Item Number
Rubberwood	CORBEL-A-7-RW

CORBEL-A-9-
Low Profile Acanthus Corbel
2-3/4 x 1-1/2 x 4-1/2

Species	Item Number
Rubberwood	CORBEL-A-9-RW

CORBEL-A-10-
Low Profile Acanthus Corbel
3-1/2 x 1-1/4 x 5-1/2

Species	Item Number
Rubberwood	CORBEL-A-10-RW

CORBEL-A-11-
Low Profile Acanthus Corbel
4-1/2 x 2 x 7

Species	Item Number
Rubberwood	CORBEL-A-11-RW

ONLAY-1-M-
Hand Carved Onlay
24 x 5 x 3/4

Species	Item Number
Rubberwood	ONLAY-1-M-RW

ONLAY-2-S-
Hand Carved Onlay
20 x 4-1/4 x 3/4

Species	Item Number
Rubberwood	ONLAY-2-S-RW

ONLAY-2-M-
Hand Carved Onlay
24 x 5 x 3/4

Species	Item Number
Red Oak	ONLAY-2-M-RO

ONLAY-2-L-
Hand Carved Onlay
36 x 7-1/2 x 7/8

Species	Item Number
Rubberwood	ONLAY-2-L-RW

PED-C-
Pedestal Foot Corner
6-1/2 x 6-1/2 x 4

Species	Item Number
Rubberwood	PED-C-RW

PB-9-
Plinth Block
3-3/4 x 7 x 1

Species	Item Number
Rubberwood	PB-9-RW

PED-2-C-
Pedestal Foot Corner
8-1/4 x 8-1/4 x 4

Species	Item Number
Rubberwood	PED-2-C-RW

PED-L-
Pedestal Foot Left
6-1/8 x 4 x 2-1/2

Species	Item Number
Alder	PED-L-AL
Rubberwood	PED-L-RW

PED-M-
Pedestal Foot Middle
11-1/2 x 1-3/4

Species	Item Number
Alder	PED-M-AL

PED-R-
Pedestal Foot Right
6-1/8 x 4 x 2-1/2

Species	Item Number
Alder	PED-R-AL
Rubberwood	PED-R-RW

PED-CR-
Rounded Pedestal Foot Corner
7 x 7 x 4

Species	Item Number
Rubberwood	PED-CR-RW

BUNN-1-
Bunn Foot
5 x 3

Species	Item Number
Rubberwood	BUNN-1-RW

BUNN-2-
Turned Bunn Foot
4 x 4

Species	Item Number
Alder	BUNN-2-AL
Maple	BUNN-2-MP
Rubberwood	BUNN-2-RW

BUNN-3-
Turned Bunn Foot
4 x 6

Species	Item Number
Maple	BUNN-3-MP

BUNN-6-
Square Bunn Foot
3-7/8 x 3-7/8 x 4

Species	Item Number
Maple	BUNN-6-MP
Rubberwood	BUNN-6-RW

BUNN-7-
Round Bunn Foot
114mm x 103mm

Species	Item Number
Maple	BUNN-7-MP
Rubberwood	BUNN-7-RW

BUNN-8-
Square Bunn Foot
4 x 4 x 4

Species	Item Number
Alder	BUNN-8-AL
Maple	BUNN-8-MP
Rubberwood	BUNN-8-RW

LEG-1-
Carved Leg
3-1/2 x 3-1/2 x 5

Species	Item Number
Rubberwood	LEG-1-RW

LEG-6-
Queen Anne Leg
4 x 4 x 6

Species	Item Number
Rubberwood	LEG-6-RW

LEG-3-
Ball & Claw Leg
4-1/8 x 4-1/8 x 6

Species	Item Number
Alder	LEG-3-AL
Rubberwood	LEG-3-RW

LEG-4-
Ball & Claw Leg
4 x 4 x 8

Species	Item Number
Rubberwood	LEG-4-RW

DRAWER SLIDES

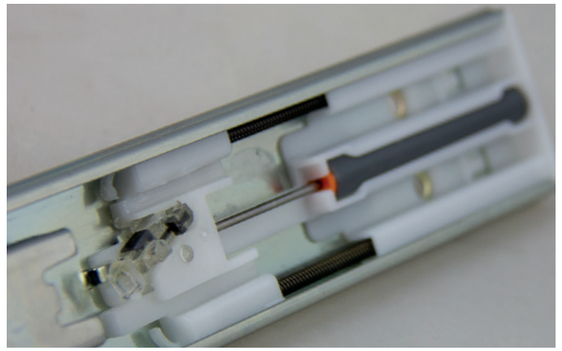

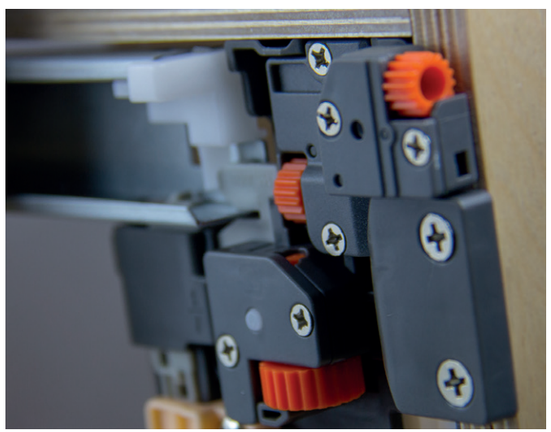

PRIDE INDUSTRIAL®
DECORATIVE HARDWARE
FUNCTIONAL HARDWARE
& MORE

MEGA PRO

DOUBLE WALL DRAWER BOX SYSTEM

Double Wall Undermount Soft Close Slide

* 3-Way adjustable
* Full Extension
* Under Mounted
* Lever Disconnect
* Size: 12" ~ 22"
* Load Capacity: 100 lbs
* Material: Cold Rolled Steel

GRAY COLOR

ITEM NUMBER	SIZE	HEIGHT
90-1288	300mm (12")	88mm
90-1488	350mm (14")	88mm
90-1688	400mm (16")	88mm
90-1888	450mm (18")	88mm
90-2088	500mm (20")	88mm
90-2288	550mm (22")	88mm
90-12126	300mm (12")	126mm
90-14126	350mm (14")	126mm
90-16126	400mm (16")	126mm
90-18126	450mm (18")	126mm
90-20126	500mm (20")	126mm
90-22126	550mm (22")	126mm
90-12172	300mm (12")	172mm
90-14172	350mm (14")	172mm
90-16172	400mm (16")	172mm
90-18172	450mm (18")	172mm
90-20172	500mm (20")	172mm
90-22172	550mm (22")	172mm
90-12238	300mm (12")	238mm
90-14238	350mm (14")	238mm
90-16238	400mm (16")	238mm
90-18238	450mm (18")	238mm
90-20238	500mm (20")	238mm
90-22238	550mm (22")	238mm

GALLERY RAILS

90-SIDERAIL12	300mm (12")
90-SIDERAIL14	350mm (14")
90-SIDERAIL16	400mm (16")
90-SIDERAIL18	450mm (18")
90-SIDERAIL20	500mm (20")
90-SIDERAIL22	550mm (22")

WHITE COLOR

ITEM NUMBER	SIZE	HEIGHT	
90-1288W	300mm (12")	88mm	Special Order
90-1488W	350mm (14")	88mm	
90-1688W	400mm (16")	88mm	
90-1888W	450mm (18")	88mm	
90-2088W	500mm (20")	88mm	
90-2288W	550mm (22")	88mm	
90-12126W	300mm (12")	126mm	Special Order
90-14126W	350mm (14")	126mm	
90-16126W	400mm (16")	126mm	
90-18126W	450mm (18")	126mm	
90-20126W	500mm (20")	126mm	
90-22126W	550mm (22")	126mm	
90-12172W	300mm (12")	172mm	Special Order
90-14172W	350mm (14")	172mm	
90-16172W	400mm (16")	172mm	
90-18172W	450mm (18")	172mm	
90-20172W	500mm (20")	172mm	
90-22172W	550mm (22")	172mm	
90-12238W	300mm (12")	238mm	Special Order
90-14238W	350mm (14")	238mm	
90-16238W	400mm (16")	238mm	
90-18238W	450mm (18")	238mm	
90-20238W	500mm (20")	238mm	
90-22238W	550mm (22")	238mm	

GALLERY RAILS

90-SIDERAIL12W	300mm (12")	Special Order
90-SIDERAIL14W	350mm (14")	Special Order
90-SIDERAIL16W	400mm (16")	Special Order
90-SIDERAIL18W	450mm (18")	Special Order
90-SIDERAIL20W	500mm (20")	Special Order
90-SIDERAIL22W	550mm (22")	Special Order

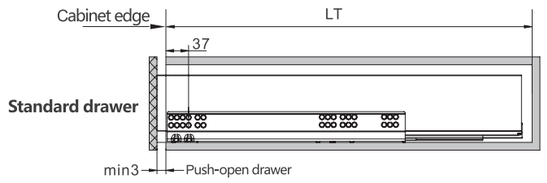

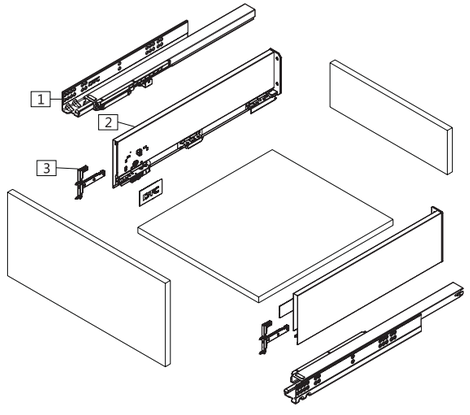

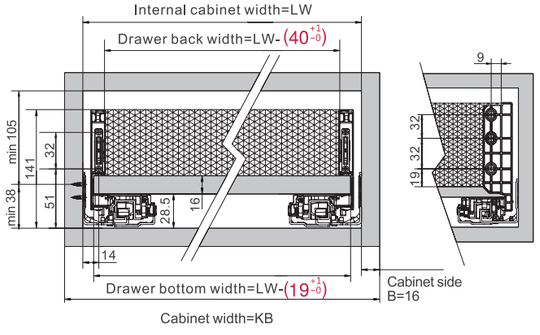

PRIDE INDUSTRIAL®
DECORATIVE HARDWARE
FUNCTIONAL HARDWARE
& MORE

SYNC PRO

SYNCHRONIZED UNDERMOUNTS 6X

Elevate Your Drawer Experience with Precision and Smooth Performance

* Experience smoother and softer drawer operation.
* Enhanced stability with a synchronous sliding system.
* More accurate tool-free adjustment for drawer panel
* Height adjustment: 0~+3mm
* Side adjustment: +-2mm
* Depth adjustment with self-adapting feature: 0 to +6mm (For Inset Application)
* **Dynamic load capacity: 120lbs, 50000 cycles**

Also available for ¾ material

Item Number	Item Number
61SF12	61SF3412
61SF15	61SF3415
61SF18	61SF3418
61SF21	61SF3421
61SF24	

61SFCLIPS INCLUDED

9810BRKT

Outside Drawer Width

Drawer side Thickness	5/8" (16mm)	1/2" (13mm)
Inside Cabinet Width Deduction	3/8" (10mm)	5/8" (16mm)

7800-BRKT

9800BRKT

Standard drawer

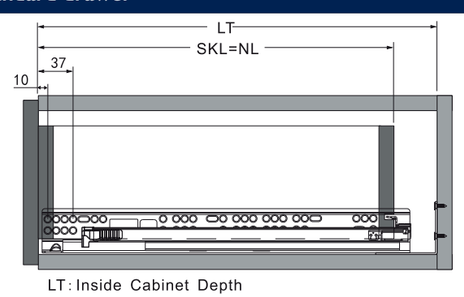

LT: Inside Cabinet Depth

Rear mounting bracket

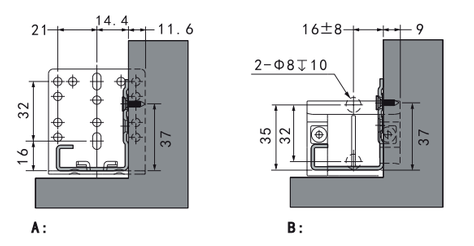

Steel rear mounting bracket

Plastic rear mounting bracket

Slide installation

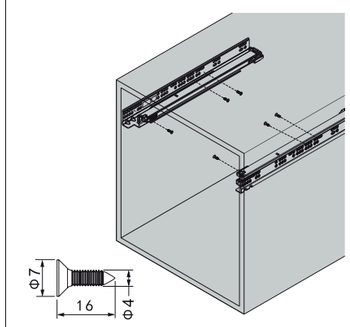

Drawer back preparation, 3D Locking device installation

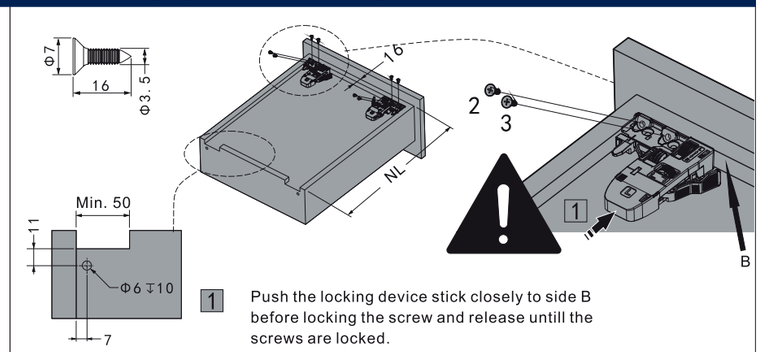

1 Push the locking device stick closely to side B before locking the screw and release untill the screws are locked.

Drawer installation

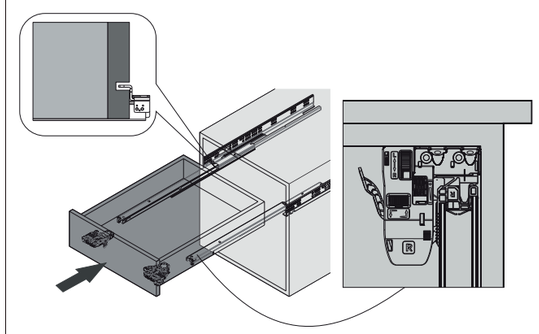

Removal of the drawer

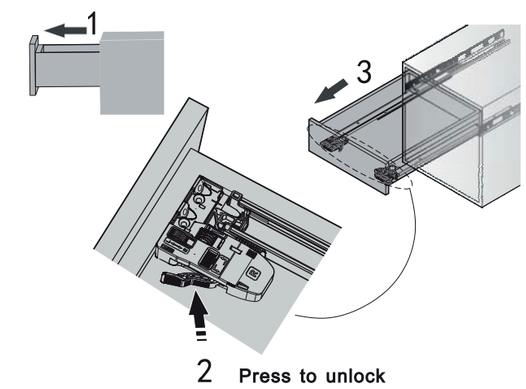

Press to unlock

Side adjustment

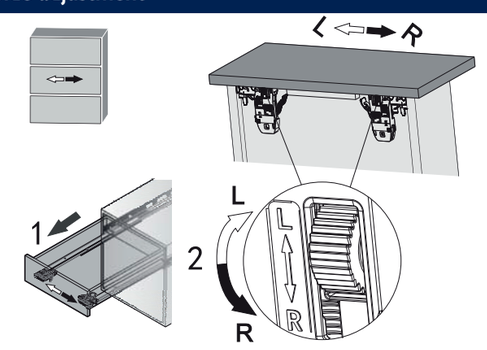

Height adjustment

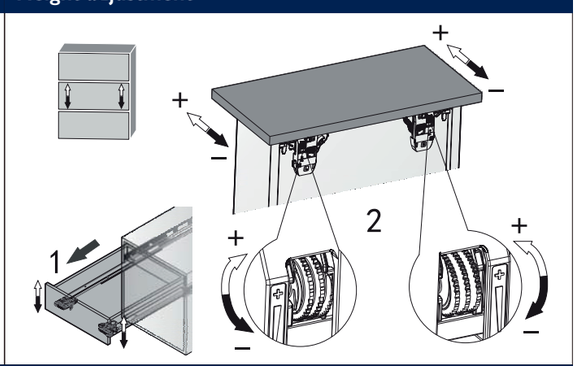

Depth adjustment with self-adaption

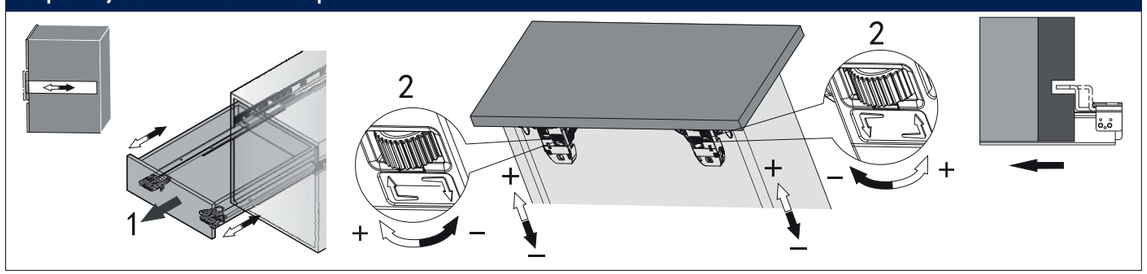

PRIDE INDUSTRIAL®
DECORATIVE HARDWARE
FUNCTIONAL HARDWARE
& MORE

PERFORM MAX 6X

(9903 Series)

SOFT-CLOSE UNDERMOUNT SLIDE

Heavy Duty Undermount Soft Close Slide With 3D Locking Device

* 6-Way Adjustable
* Full Extension
* Under Mounted
* Size: 18" ~ 30"
* Load Capacity: 140 lbs

ITEM NUMBER
990318SOFT (6 Pairs)
990321SOFT (6 Pairs)
990324SOFT (3 Pairs)
990327SOFT (3 Pairs)
990330SOFT (3 Pairs)
9903CLIPS
9903BRKTM

9880-CLIPS
INCLUDED

LW= Internal Cabinet Width

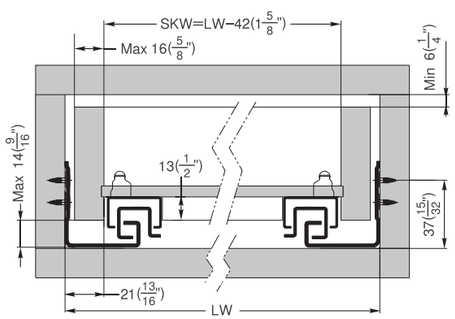

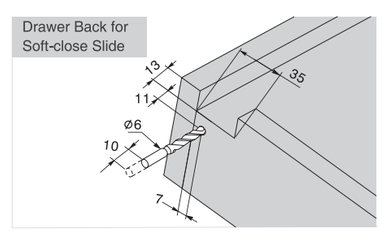

Drawer length	Runner length	Internal Cabinet Depth	
		Max	Min
457(18")	470(18 1/2")	522(20 9/16")	479(18 7/8")
533(21")	546(21 1/2")	598(23 9/16")	555(21 7/8")
610(24")	465(18 3/10")	——	634(24 31/32")
686(27")	505(19 9/10")	——	709(27 29/32")
762(30")	595(23 2/5")	——	786(30 15/16")

PUSHSYNC

SYNCHRONIZED PUSH TO OPEN
SOFT CLOSE UNDERMOUNT 6X

Elevate Your Drawer Experience with Precision and Smooth Performance

* Experience smoother and softer drawer operation.
* Enhanced stability with a synchronous sliding system.
* More accurate tool-free adjustment for drawer panel
* Height adjustment: 0~+3mm
* Side adjustment: +-2mm
* Depth adjustment with self-adapting feature: 0 to +6mm (For Inset Application)
* **Dynamic load capacity: 120lbs, 50000 cycles**

Item Number
73POEU12 (special order)
73POEU14 (special order)
73POEU16
73POEU18
73POEU20
73POEU22

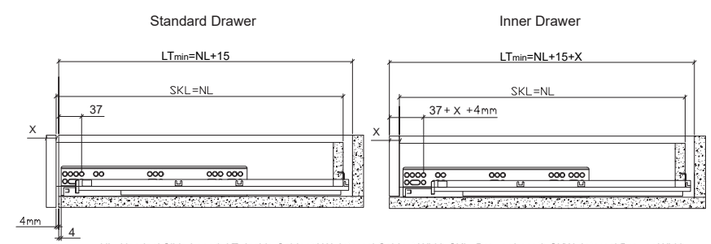

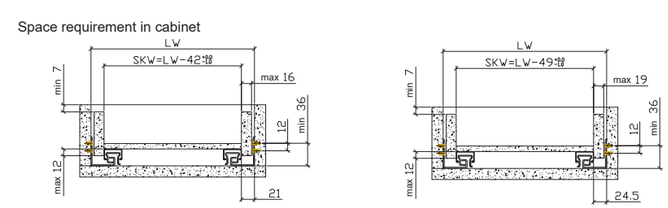

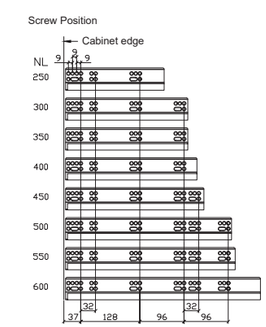

PRIDE INDUSTRIAL®
DECORATIVE HARDWARE
FUNCTIONAL HARDWARE
& MORE

PERFORM PRO 6X

(9880 Series)

SOFT-CLOSE UNDERMOUNT SLIDE

Soft Close Undermount Slide with 3-D Locking Device

* 6-Way adjustable
* Full Extension
* Under Mounted
* Lever Disconnect

* Size: 9" ~ 21"
* Load Capacity: 100 lbs
* Material: Cold Rolled Steel
* Case: 6 Pairs

ITEM NUMBER
98809SOFT
988012SOFT
988015SOFT
988018SOFT
988020SOFT
988021SOFT
9880CLIPS
xBRKT
9810BRKT

9800BRKT

9810BRKT

9880CLIPS
INCLUDED

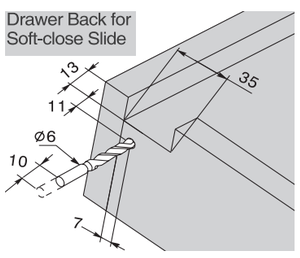

Installation for drawers between 12.7mm-16mm thick drawer sides

IDW= Internal Drawer Width
ICW= Internal Cabinet Width

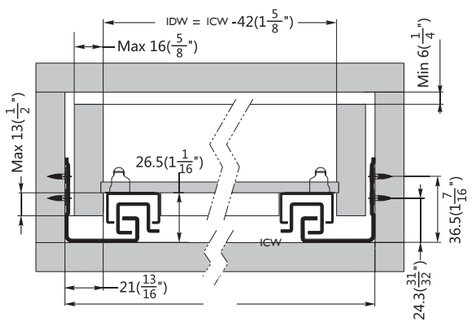

Drawer length	Runner length	Internal Cabinet Depth	
		Max	Min
(12")	317(12 1/2")	369(14 9/16")	326(12 7/8")
(15")	394(15 1/2")	446(17 9/16")	403(15 7/8")
(18")	470(18 1/2")	522(20 9/16")	479(18 7/8")
(21")	546(21 1/2")	598(23 9/16")	555(21 7/8")

Outside Drawer Width

Drawer side Thickness	5/8" (16mm)	1/2" (13mm)
Inside Cabinet Width Deduction	3/8" (10mm)	5/8" (16mm)

PERFORM PRO 3/4 6X

SLIDES

(8834 Series)

SOFT-CLOSE UNDERMOUNT SLIDE

Soft Close Undermount Slide with 3-D Locking Device

Used for 3/4" material

* 6-Way adjustable
* Full Extension
* Under Mounted
* Lever Disconnect
* Size: 9" ~ 21"

* Load Capacity: 100 lbs
* Material: Cold Rolled Steel
* Case: 6 Pairs
* Available as Special Order

ITEM NUMBER
8834-12-SOFT
8834-15-SOFT
8834-18-SOFT
8834-21-SOFT
9880CLIPS
9800BRKT
9810BRKT

9800BRKT

9810BRKT

9880CLIPS
INCLUDED

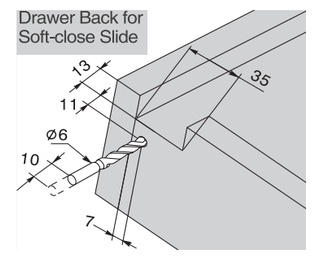

Installation
Dimentions (mm)

LW= Internal Cabinet Width

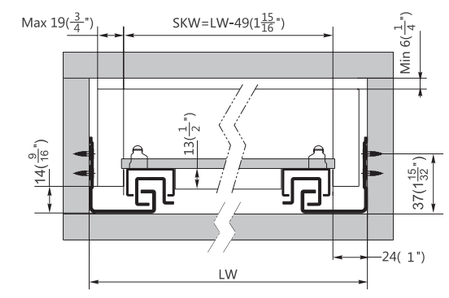

Drawer length	Runner length	Internal Cabinet Depth	
		Max	Min
229(9")	256(10")	298(11 3/4")	283(11 1/8")
305(12")	317(12 1/2")	369(14 9/16")	326(12 7/8")
381(15")	394(15 1/2")	446(17 9/16")	403(15 7/8")
457(18")	470(18 1/2")	522(20 9/16")	479(18 7/8")
533(21")	546(21 1/2")	598(23 9/16")	555(21 7/8")

Outside Drawer Width

Drawer side Thickness	3/4" (19mm)
Inside Cabinet Width Deduction	7/16" (11mm)

PRIDE INDUSTRIAL®
DECORATIVE HARDWARE
FUNCTIONAL HARDWARE
& MORE

PERFORM PRO 2X

(9800 Series)

SOFT-CLOSE UNDERMOUNT SLIDE

Soft Close Concealed Undermount with height adjustment locking device

* 2-Way adjustable
* Full Extension
* Under Mounted
* Lever Disconnect
* Size: 12" ~ 21"
* Load Capacity: 90 lbs
* Material: Cold Rolled Steel
* Case: 6 Pairs

ITEM NUMBER
980012SOFT
980015SOFT
980018SOFT
980021SOFT
9800CLIPS
9800BRKT
9810BRKT

9800BRKT

9810BRKT

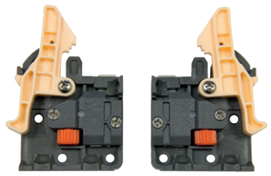

9800CLIPS
INCLUDED

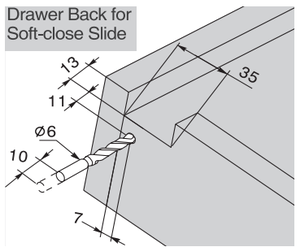

Installation for drawers between 12.7mm-16mm thick drawer sides

IDW= Internal Drawer Width
ICW= Internal Cabinet Width

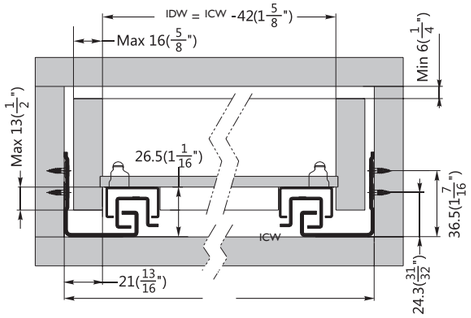

Drawer length	Runner length	Internal Cabinet Depth	
		Max	Min
(12")	317(12 1/2")	369(14 9/16")	326(12 7/8")
(15")	394(15 1/2")	446(17 9/16")	403(15 7/8")
(18")	470(18 1/2")	522(20 9/16")	479(18 7/8")
(21")	546(21 1/2")	598(23 9/16")	555(21 7/8")

Outside Drawer Width

Drawer side Thickness	5/8" (16mm)	1/2" (13mm)
Inside Cabinet Width Deduction	3/8" (10mm)	5/8" (16mm)

PERFORM PRO 3/4 2X

SLIDES

(8034 Series)

SOFT-CLOSE UNDERMOUNT SLIDE

Soft Close Concealed Undermount with height adjustment locking device

Used for 3/4" material

* 2-Way adjustable
* Full Extension
* Under Mounted
* Lever Disconnect
* Size: 12" ~ 21"
* Load Capacity: 90 lbs
* Material: Cold Rolled Steel
* Case: 6 Pairs

ITEM NUMBER
8034-12-SOFT
8034-15-SOFT
8034-18-SOFT
8034-21-SOFT
9800CLIPS
9800BRKT
9810BRKT

9800BRKT

9810BRKT

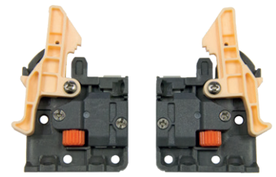

9800CLIPS
INCLUDED

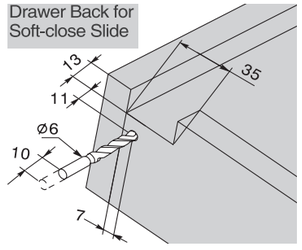

Installation for drawers between 12.7mm-16mm thick drawer sides

IDW= Internal Drawer Width
ICW= Internal Cabinet Width

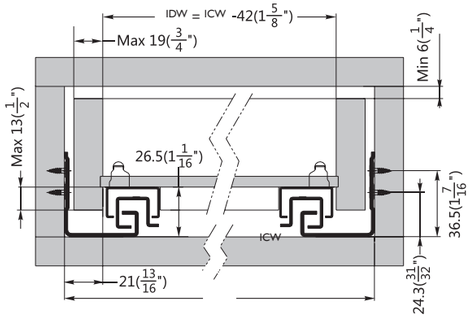

Drawer length	Runner length	Internal Cabinet Depth	
		Max	Min
(12")	317(12 1/2")	369(14 9/16")	326(12 7/8")
(15")	394(15 1/2")	446(17 9/16")	403(15 7/8")
(18")	470(18 1/2")	522(20 9/16")	479(18 7/8")
(21")	546(21 1/2")	598(23 9/16")	555(21 7/8")

Outside Drawer Width

Drawer side Thickness	3/4" (19mm)
Inside Cabinet Width Deduction	7/16" (11mm)

PRIDE INDUSTRIAL®
DECORATIVE HARDWARE
FUNCTIONAL HARDWARE
& MORE

FORTE PRO 6X

(8500 Series)

SOFT-CLOSE UNDERMOUNT SLIDE

Soft Close Undermount Slide with 3-D Locking Device

* 6-Way Adj Drawer release clips (included)
* Size: 9"~21"
* Full Extension-Soft Close
* Face Frame Back Bracket (optional)
* Load Capacity: 100 lbs
* Case: 6 Pairs
* Material: Cold Rolled Steel

ITEM NUMBER	
8500-9-SOFT	(6 pairs/case)
8500-12-SOFT	(6 pairs/case)
8500-15-SOFT	(6 pairs/case)
8500-18-SOFT	(6 pairs/case)
8500-21-SOFT	(6 pairs/case)
9800-BRKT	(100 pairs)
8500-CLIPS	(50 pairs)
8500-NARWCLIP	(100 pairs)

8500-NARWCLIP

9800-BRKT

8500-CLIPS
INCLUDED

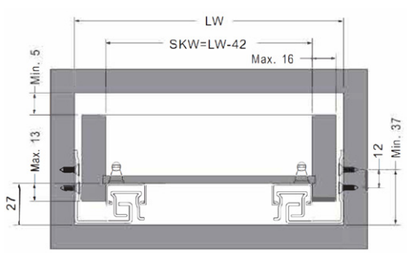

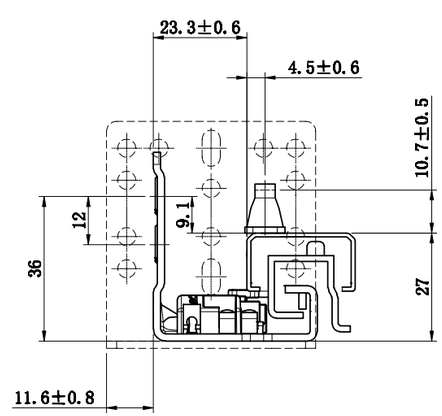

Outside Drawer Width

Drawer side Thickness	5/8" (16mm)	1/2" (13mm)
Inside Cabinet Width Deduction	3/8" (10mm)	5/8" (16mm)

FORTE PRO 3/4 6X

SLIDES

(8534 Series)

SOFT-CLOSE UNDERMOUNT SLIDE

Soft Close Undermount Slide with 3-D Locking Device

Used for 3/4" material

* 6-Way Adj Drawer release clips (included)
* Size: 12" ~ 21"
* Full Extension-Soft Close
* Face Frame Back Bracket (optional)
* Load Capacity: 100 lbs
* Case: 6 Pairs
* Material: Cold Rolled Steel

ITEM NUMBER	
8534-15-SOFT	(6 pairs/case)
8534-18-SOFT	(6 pairs/case)
8534-21-SOFT	(6 pairs/case)
9800-BRKT	(100 pairs)
8500-CLIPS	(50 pairs)
8500-NARWCLIP	(100 pairs)

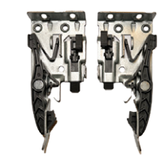

8500-NARWCLIP

9800-BRKT

8500-CLIPS
INCLUDED

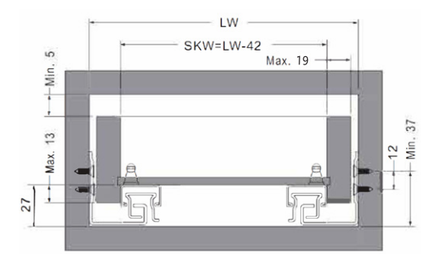

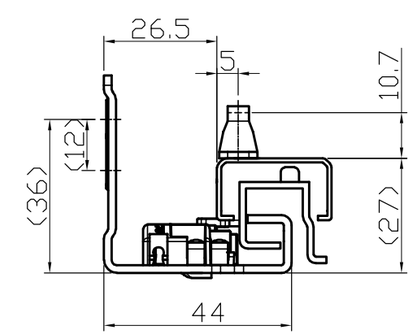

19mm Wood thickness

Outside Drawer Width

Drawer side Thickness	3/4" (19mm)
Inside Cabinet Width Deduction	7/16" (11mm)

PRIDE INDUSTRIAL®
DECORATIVE HARDWARE
FUNCTIONAL HARDWARE
& MORE

7900 Series

SOFT-CLOSE UNDERMOUNT SLIDE

6-way adjustable with 3D Locking Device Soft Close Undermount Slide

* 75 lbs. dynamic load capacity
* 6-Way adjustable
* KCMA Approved
* Size: 12" ~ 21"
* Locking Device designed to achieve min drawer width of 6"
* Full Extension
* Height Adjustment: 0-3mm
* Lateral Adjustment: ±2mm
* Depth Adjustment: 0-3.5mm (For Inset Drawers)
* Lever Disconnect
* Material: Cold Rolled Steel
* Case: 6 Pairs

ITEM NUMBER
7900-12-SOFT
7900-15-SOFT
7900-18-SOFT
7900-21-SOFT

Your installers will appreciate the ease with which they can make your drawer fronts align.

7900-CLIPS

9800BRKT

7900-BRKT

9810BRKT

Our latest addition to the lineup utilizes the same brackets as our trusted soft-close undermount slides. Seamless integration for your convenience!

Drawer installation dimensions

NL = Nominal Slide Length LT = Internal cabinet Depth

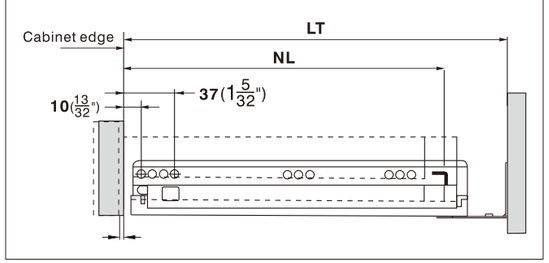

Inner drawer installation dimensions

NL = Nominal Slide Length LT = Internal cabinet Depth

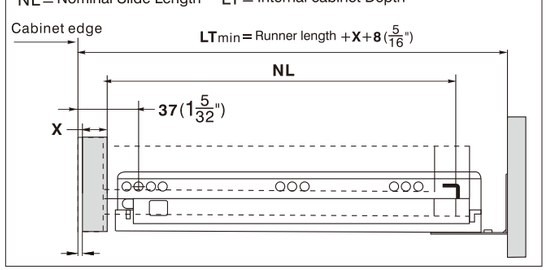

ADVANTAGE PRO

(7800 Series)

SOFT-CLOSE UNDERMOUNT SLIDE

SLIDES

Soft Close Undermount Slide with locking device and rear brackets

* 2-Way adjustable
* Rear metal bracket included
* Under Mounted
* Lever Disconnect
* Size: 12" ~ 21"
* Load Capacity: 75 lbs
* Material: Cold Rolled Steel
* Case: 6 Pairs

ITEM NUMBER
7800-12-SOFT
7800-15-SOFT
7800-18-SOFT
7800-21-SOFT
7800-CLIPS (100 PAIRS)
7800-BRKT (200 PCS)
7800-EUBRKT (200 PCS)

7800-CLIPS
INCLUDED

7800-BRKT
INCLUDED

7800-EUBRKT
OPTIONAL
FRAMELESS APPLICATION
REAR BRACKET

Outside Drawer Width

Drawer side Thickness	5/8" (16mm)	1/2" (13mm)
Inside Cabinet Width Deduction	3/8" (10mm)	5/8" (16mm)

NL = Nominal Slide Length LT = Internal cabinet Depth

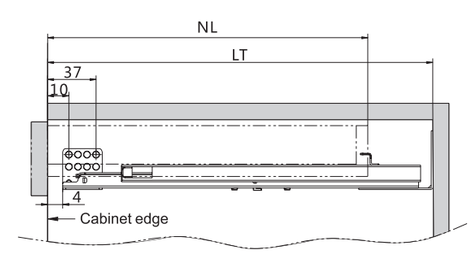

SKW = Internal Drawer Width LW = Internal Cabinet Width

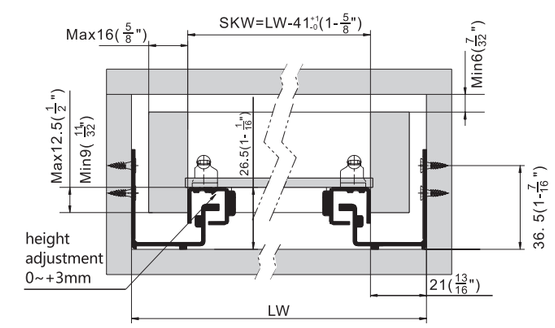

PRIDE INDUSTRIAL®
DECORATIVE HARDWARE
FUNCTIONAL HARDWARE
& MORE

SOFT PRO X

(4903 Series)

SOFT-CLOSE SIDE MOUNT SLIDE

Soft Close Ballbearing Slide

* Full Extension
* Side Mounted
* 46mm Height
* Soft Close
* 12.7mm Side Clearance
* Case: 10 Pairs

* Finish: Zinc
* Lever Disconnect
* Size: 10" ~ 28"
* Load Capacity: 100 lbs
* Material: Cold Rolled Steel

ITEM NUMBER
4903-10-ZP
4903-12-ZP
4903-14-ZP
4903-16-ZP
4903-18-ZP
4903-20-ZP
4903-22-ZP
4903-24-ZP
4903-26-ZP
4903-28-ZP
4903-BRKT (200 PCS)
4903-SKT (250 PAIRS)
4903-BRKTPI (100 PCS)
4903-BRKTSO (100 PCS)

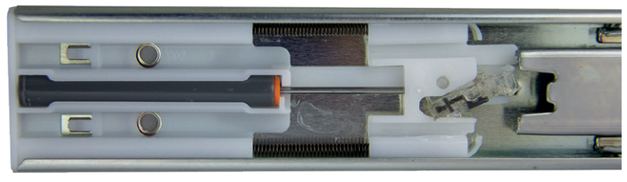

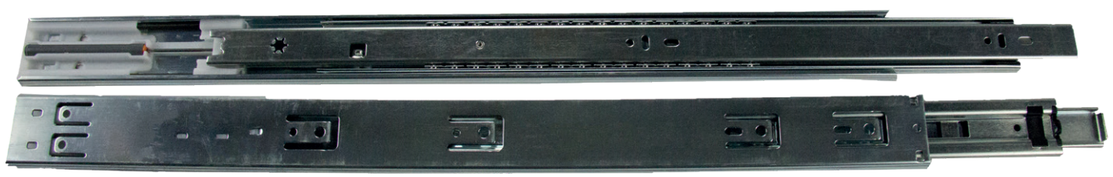

4903-BRKT

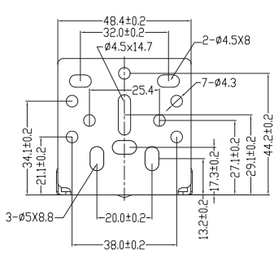

4903-SKT
Adjustable rear plastic socket

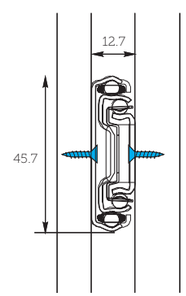

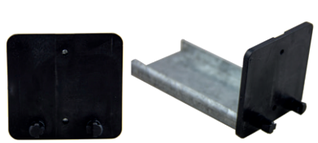

4903-BRKTPI
Plug In Rear Adjustable Socket

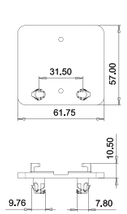

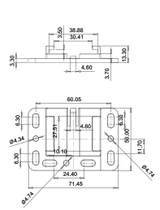

4903-BRKTSO
Screw On Rear Adjustable Socket

4600 Series

SLIDES

STANDARD BALL BEARING SLIDE

* Full Extension
* Side Mounted
* 46mm Height
* Flat Sided Profile
* 12.7mm Side Clearance
* Case: 10 Pairs

* Finish: Zinc or Black
* Lever Disconnect
* Size: 10" ~ 28"
* Load Capacity: 100 lbs
* Material: Cold Rolled Steel
* OT = 1.5" Over Travel

ITEM NUMBER BK
4600-12-BK
4600-14-BK
4600-14-BKOT
4600-16-BK
4600-16-BKOT
4600-18-BK
4600-20-BK
4600-20-BKOT
4600-22-BK
4600-24-BK
4600-26-BK

ITEM NUMBER ZP
4600-10-ZPOT
4600-12-ZP
4600-12-ZPOT
4600-14-ZPOT
4600-18-ZPOT
4600-20-ZPOT
4600-22-ZPOT
4600-26-ZPOT
4600-28-ZPOT
4600-BRKT (100 PCS)
4600-BRKTPI (100 PCS)
4600-BRKTSO (100 PCS)

4600-BRKT

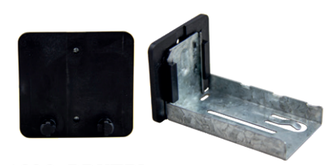

4600-BRKTPI
Plug In Rear Adjustable Socket

4600-BRKTSO
Screw On Rear Adjustable Socket

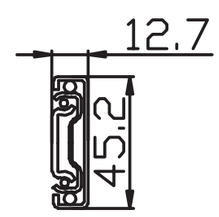

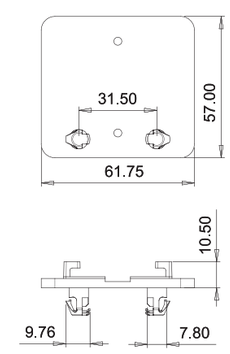

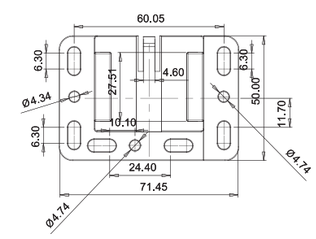

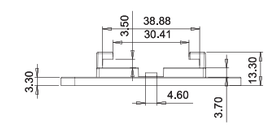

PRIDE INDUSTRIAL®
DECORATIVE HARDWARE
FUNCTIONAL HARDWARE
& MORE

4800 Series

STANDARD BALL BEARING SLIDE

* Full Extension
* Side Mounted
* 46mm Height
* Round Sided Profile
* 12.7mm Side Clearance
* Case: 10 Pairs

* Finish: Zinc, Matte Black
* Lever Disconnect
* Size: 8" ~ 28"
* Load Capacity: 100 lbs
* Material: Cold Rolled Steel
* OT = 1.5" Over Travel

ITEM NUMBER ZP
4800-8-ZP
4800-10-ZP
4800-12-ZP
4800-14-ZPOT
4800-16-ZPOT
4800-18-ZPOT
4800-20-ZPOT
4800-22-ZPOT
4800-24-ZPOT
4800-26-ZPOT
4800-28-ZPOT
4800-BRKT (100 PCS)
4800-BRKTPI (100 PCS)
4800-BRKTPI10 (100 PCS)
4800-BRKTSO (100 PCS)

4800-BRKT

Optional Plastic Rear Socket

4903-SKT

PRODUCTION PACK OPTIONS ZP
4800-14-ZPOT-CM
4800-14-ZPOT-DM
4800-16-ZPOT-CM
4800-16-ZPOT-DM
4800-18-ZPOT-CM
4800-18-ZPOT-DM
4800-20-ZPOT-CM
4800-20-ZPOT-DM
4800-22-ZPOT-CM
4800-22-ZPOT-DM
*40 pieces per case

ITEM NUMBER BK
4800-10-BK
4800-12-BK
4800-14-BK
4800-16-BK
4800-18-BK
4800-20-BK
4800-22-BK
4800-24-BK

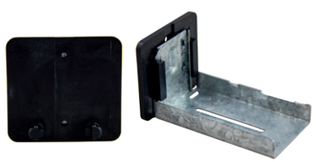

4800-BRKTPI
Plug In Rear Adjustable Socket

4800-BRKTPI10
Plug In Rear Adjustable Socket for 4800 Slide
10mm Dowel

4800-BRKTSO
Screw On Rear Adjustable Socket

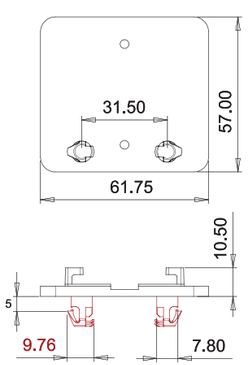

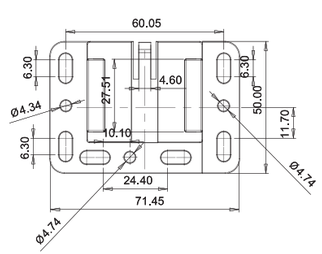

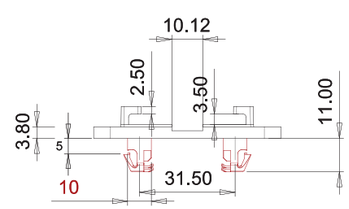

5890

SLIDES

HEAVY DUTY BALL BEARING SLIDE

* Full Extension
* Side Mounted
* 58mm Height
* Round Sided Profile
* 19mm Side Clearance
* Case: 5 Pairs

* Finish: Zinc
* Lever Disconnect
* Size: 10" ~ 36"
* Load Capacity: 250 lbs
* Material: Cold Rolled Steel

ITEM NUMBER
5890-10-ZP
5890-12-ZP-2
5890-14-ZP-2
5890-16-ZP-2
5890-18-ZP-2
5890-20-ZP-2
5890-22-ZP-2
5890-24-ZP-2
5890-26-ZP-2
5890-28-ZP-2
5890-30-ZP-2
5890-32-ZP-2
5890-34-ZP-2
5890-36-ZP-2

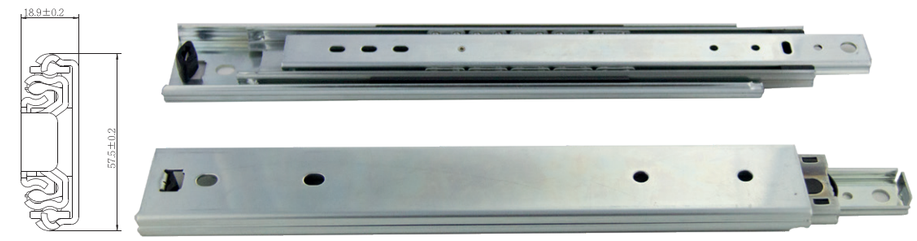

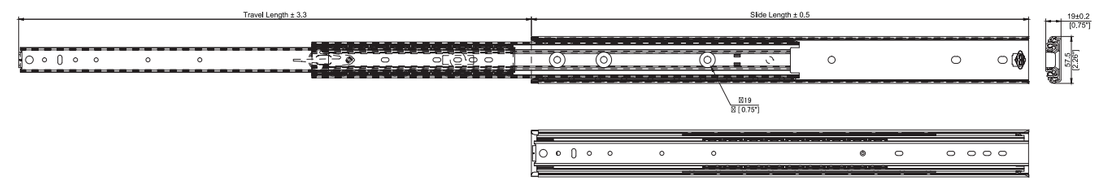

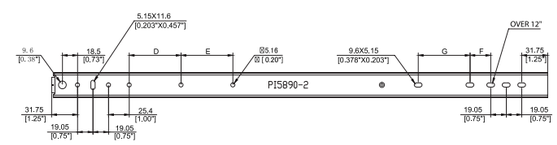

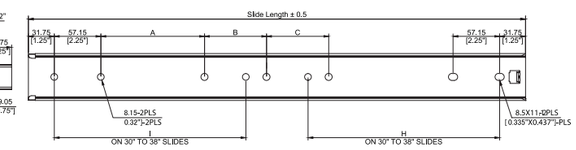

Part Number	Slide Length	Travel Length	A	B	C	D	E	F	G	H	I
PI5890-10"	254mm [10]"	254mm [10]"	-	-	-	-	-	-	-	-	-
PI5890-12"	304.8mm [12]"	323.85mm [12.75]"	-	-	-	-	-	-	-	-	-
PI5890-14"	355.6mm [14]"	374.65mm [14.75]"	-	-	-	-	-	-	-	-	-
PI5890-16"	406.4mm [16]"	425.45mm [16.75]"	-	-	-	63.5 [2.5"]	63.5 [2.5"]	25.4 [1"]	-	-	-
PI5890-18"	457.2mm [18]"	476.25mm [18.75]"	-	-	-	63.5 [2.5"]	63.5 [2.5"]	25.4 [1"]	63.5 [2.5"]	-	-
PI5890-20"	508mm [20]"	527.05mm [20.75]"	-	-	-	63.5 [2.5"]	63.5 [2.5"]	25.4 [1"]	63.5 [2.5"]	-	-
PI5890-22"	558.8mm [22]"	577.85mm [22.75]"	127 [5"]	76.2 [3"]	76.2 [3"]	63.5 [2.5"]	63.5 [2.5"]	25.4 [1"]	63.5 [2.5"]	-	-
PI5890-24"	609.6mm [24]"	628.65mm [24.75]"	127 [5"]	76.2 [3"]	76.2 [3"]	63.5 [2.5"]	63.5 [2.5"]	25.4 [1"]	63.5 [2.5"]	-	-
PI5890-26"	660.4mm [26]"	679.45mm [26.75]"	127 [5"]	76.2 [3"]	76.2 [3"]	63.5 [2.5"]	63.5 [2.5"]	25.4 [1"]	63.5 [2.5"]	-	-
PI5890-28"	711.2mm [28]"	730.25mm [28.75]"	127 [5"]	76.2 [3"]	76.2 [3"]	63.5 [2.5"]	63.5 [2.5"]	25.4 [1"]	63.5 [2.5"]	-	-
PI5890-30"	762mm [30]"	781.05mm [30.75]"	-	-	-	63.5 [2.5"]	63.5 [2.5"]	25.4 [1"]	63.5 [2.5"]	234.95 [9.25"]	234.95 [9.25"]
PI5890-32"	812.8mm [32]"	831.85mm [32.75]"	-	-	-	63.5 [2.5"]	63.5 [2.5"]	25.4 [1"]	63.5 [2.5"]	234.95 [9.25"]	234.95 [9.25"]
PI5890-34"	863.6mm [34]"	882.65mm [34.75]"	-	-	-	63.5 [2.5"]	63.5 [2.5"]	25.4 [1"]	63.5 [2.5"]	234.95 [9.25"]	234.95 [9.25"]
PI5890-36"	914.4mm [36]"	933.45mm [36.75]"	-	-	-	63.5 [2.5"]	63.5 [2.5"]	25.4 [1"]	63.5 [2.5"]	234.95 [9.25"]	234.95 [9.25"]

Model: # 5000 Progressive Ball Bearing Slide

* Full Extension
* Side Mounted
* 12.7mm Side Clearance
* Material: Cold Rolled Steel
* Case: 10 Pairs
* Finish: Zinc or Black
* Lever Disconnect
* Size: 12" ~ 28"
* Load Capacity: 150 lbs
* OT = 1.5" Over Travel

ITEM NUMBER
5000-12-ZPOT
5000-14-ZPOT
5000-16-BKOT
5000-16-ZPOT
5000-18-BKOT
5000-18-ZPOT
5000-20-BKOT
5000-20-ZPOT
5000-22-ZPOT
5000-24-ZPOT
5000-26-ZPOT
5000-28-ZPOT

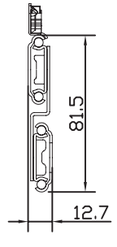

Model: # 3500 Low Profile Ball Bearing Slide

* Full Extension
* Side Mounted
* 35mm Height
* Round Sided Profile
* 12.7mm Side Clearance
* Case: 10 Pairs
* Finish: Zinc or Black
* Lever Disconnect
* Size: 12" ~ 24"
* Load Capacity: 75 lbs
* Material: Cold Rolled Steel
* OT = 1." Over Travel

ITEM NUMBER
3500-12-ZP
3500-16-ZPOT
3500-18-ZP
3500-20-ZP
3500-20-ZPOT
3500-22-ZP
3500-24-ZP
3500-BRKT (200 PCS)

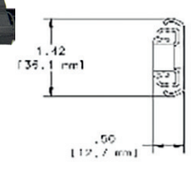

3500-BRKT

Model: # 3000 Keyboard Slide

* Top Mount Fixed Brackets
* Plastic Protective Cover
* Detent In & Detent Out
* Material: Cold Rolled Steel
* Case: 10 Pairs
* Finish: Zinc or Black
* Size: 16"
* Load Capacity: 60 lbs

ITEM NUMBER
3000-16-BK
3000-16-ZP

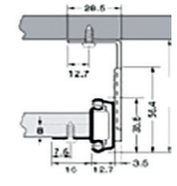

Model: # 4700 Bayonet Ball Bearing Slide

* Full Extension
* Side Mounted
* 46mm Height
* Flat Sided Profile
* 12.7mm Side Clearance
* Case: 10 Pairs
* Finish: Zinc
* Lever Disconnect
* Size: 16"~ 23"
* Load Capacity: 100 lbs
* Material: Cold Rolled Steel
* OT = 1." Over Travel

ITEM NUMBER
4700-16-ZP
4700-19-ZPOT
4700-23-ZPOT

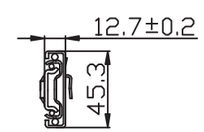

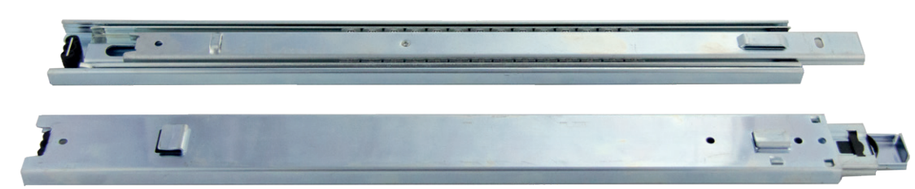

Model: # 4000 Standard Euro Slide

* 3/4 Extension
* Double Stopper
* One Side Captive
* 32mm System
* Material: Cold Rolled Steel

* Finish: Epoxy Powder Coat
* Size: 10" ~ 24"
* Load Capacity: 75 lbs
* Option - Soft Roller
* Option - Rear Sockets

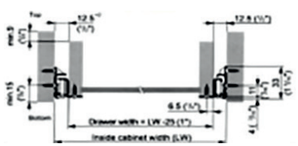

Packaging

Set Pack: 25 pairs
Bulk: 100 pieces
CL/CR/DL/DR

ITEM NUMBER
4000-10-1WT
4000-12-1WT
4000-14-1WT
4000-16-1WT
4000-18-1WT
4000-20-1WT
4000-22-1WT
4000-24-1WT

14" to 22" also available:
4000-(SIZE)-WT-CL
4000-(SIZE)-WT-CR
4000-(SIZE)-WT-DL
4000-(SIZE)-WT-DR

Model: # 4200 Crimp-On Euro Slide

* 3/4 Extension
* Double Stopper
* One Side Captive
* 32mm System
* (CL:CR:DL:DR: 100 pieces per case)

* Finish: Epoxy Powder Coat
* Material: Cold Rolled Steel
* Load Capacity: 75 lbs

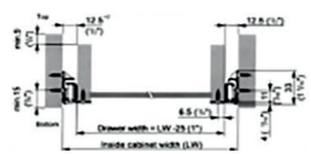

20" **ITEM NUMBER**

4200-20-WT-CL	Cabinet Left
4200-20-WT-CR	Cabinet Right
4200-20-WT-DL	Drawer Left
4200-20-WT-DR	Drawer Right

22" **ITEM NUMBER**

4200-22-WT-CL	Cabinet Left
4200-22-WT-CR	Cabinet Right
4200-22-WT-DL	Drawer Left
4200-22-WT-DR	Drawer Right

EUSKT # 1

3-1/2" Rear Bracket for Euro Slides

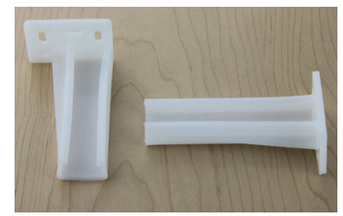

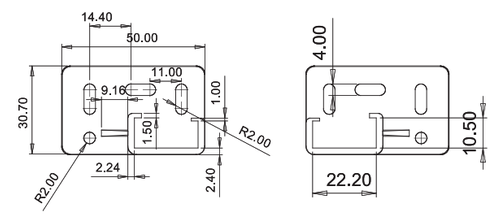

EUSKT-1-L LEFT
EUSKT-1-R RIGHT
CASE: 500 pieces per box

EUSKT # 2

3" Premium Rear Bracket for Euro Slides

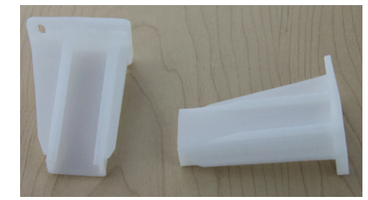

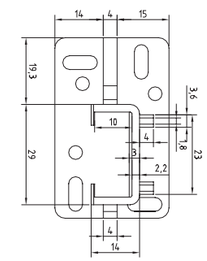

EUSKT-2-L LEFT
EUSKT-2-R RIGHT
CASE: 500 pieces per box

EUSKT # 5

3-1/2" Heavy Duty Rear Bracket for Euro Slides w/o Dowels

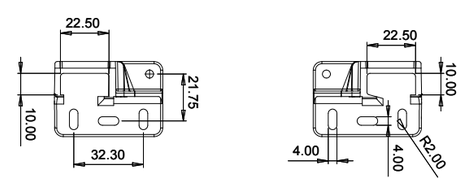

EUSKT-5-L LEFT
EUSKT-5-R RIGHT
CASE: 500 pieces per box

EUSKT # 6

3-1/2" Heavy Duty Universal Adjustable Rear Bracket for Euro Slides w/ Dowels

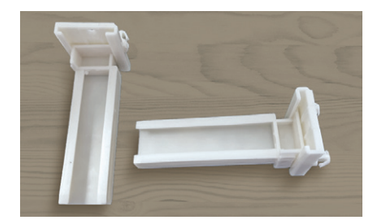

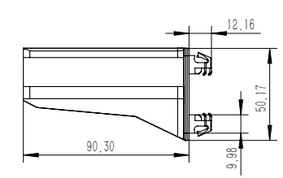

EUSKT-6
CASE: 250 pieces per box

TRASH CAN PULL OUTS

Soft Close Pull Outs

Unique Features

* One adjustable bottom mount unit that fits any cabinet opening from 16" to 22 11/16"
* One adjustable bottom mount unit that fits any cabinet opening from 11 3/4" to 16 11/16"
* All needed components come with 1 part number.
* Dynamic load capacity 100 lbs.
* A sleek look that fits any contemporary or Modern Kitchen
* Built to last
* Full Extension undermounts
* Adjustments:
  - -Tilt Adjustment
  - -Height Adjustment
  - -Side to Side Adjustment

BOTTOM MOUNT SOFT CLOSE PULL OUT (DOUBLE 35 QUART)

ITEM NUMBER
72BMSC1821DBL

TOP MOUNT SOFT CLOSE PULL OUT (DOUBLE 35 QUART)

ITEM NUMBER
72TMSC1821DBL

PLASTIC WASTE TRASH CAN

ITEM NUMBER
72TC35GR
72TC35BK
72TC35WT

COLOR
Grey / Black / White

CAPACITY
35 Quarts

Trash Can Pull Outs

* 3D Adjustable
* Full Extension
* Ball Bearing Slide
* Load capacity 100 Lbs
* Nominal Slide Length 18"
* Polished Chrome
* Door Mountable
* Bottom Mount

* Cans and Door Brackets sold separately

TRASH CAN PULL OUT

ITEM NUMBER		CASE
70BBSGL35PC	Single	1 Set
70BBDBL35PC	Double	1 Set

PLASTIC WASTE TRASH CAN

ITEM NUMBER
70TC35GR
70TC35BK
70TC35WT

COLOR
Grey / Black / White

CAPACITY
35 Quarts

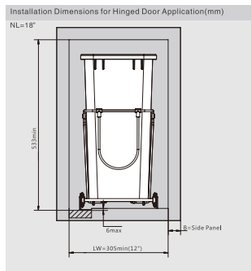

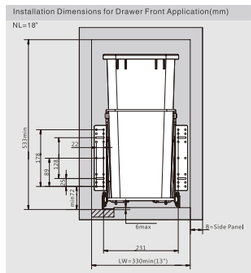

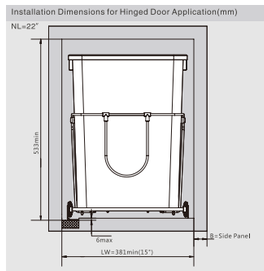

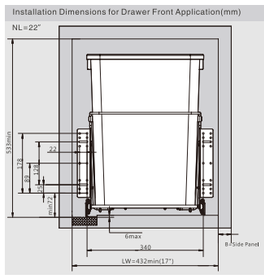

DOOR MOUNTING BRACKET

ITEM NUMBER
70BRKT

CASE
20 Sets

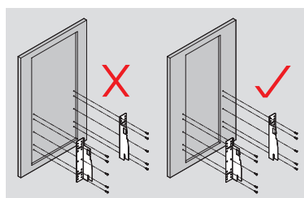

LAZY SUSAN COLLECTION

LS18RD.WT
18" ROUND
Lazy Susan White
Plastic with
stainless steel pole

LS24RD.WT
24" ROUND
Lazy Susan White
Plastic with
stainless steel pole

LS28RD.WT
28" ROUND
Lazy Susan White
Plastic with
stainless steel pole

LS24KD.WT
24" KIDNEY
Lazy Susan White
Plastic with
stainless steel pole

LS28KD.WT
28" KIDNEY
Lazy Susan White
Plastic with
stainless steel pole

LS32KD.WT
32" KIDNEY
Lazy Susan White
Plastic with
stainless steel pole

LS18RD.3TRAY
18" ROUND Lazy
Susan White with
3 Trays

Item Adjustment
Range between
31.5"-43"

INSTITUTIONAL HINGES

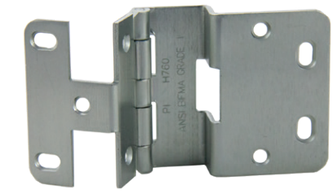

H760.
Institutional Hinge 3/4" Overlay x 13/16" Door

CASE QTY	100	**WEIGHT/CASE**	46 lbs
BOX QTY	10		

Available Colors	**Item Number**
Dull Chrome	H760.DC
Powder Dull Chrome	H760.PDC

H780.DC
Institutional Hinge 13/16" Overlay x 13/16" Door

CASE QTY	100	**WEIGHT/CASE**	46 lbs
BOX QTY	10		

Available Colors	**Item Number**
Dull Chrome	H780.DC

H760.SS
Institutional Hinge 3/4" Overlay x 13/16" Door

CASE QTY	100	**WEIGHT/CASE**	46 lbs
BOX QTY	10		

Available Colors	**Item Number**
Stainless Steel	H760.SS

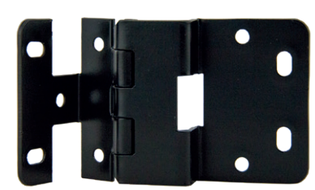

H760-45.
Institutional Hinge 3/4" Overlay x 13/16" Door
with 45mm CC on the Door Leaf

CASE QTY	100	**WEIGHT/CASE**	46 lbs
BOX QTY	10		

Available Colors	**Item Number**
Black	H760-45.BK
Dull Chrome	H760-45.DC

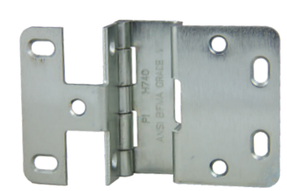

H740.DC
Institutional Hinge 3/4" Overlay x 3/4" Door

CASE QTY	100	**WEIGHT/CASE**	46 lbs
BOX QTY	10		

Available Colors	**Item Number**
Dull Chrome	H740.DC

EUROPEAN HINGES & PLATES

SFX SERIES

SOFT-CLOSE HINGES

FULL OVERLAY

110° Soft Close Clip-On CAM Hinge Full Overlay

3311-SC	No Dowels
3311-8D-SC	w/ Dowels

CASE QTY 200

HALF OVERLAY

110° Soft Close Clip-On CAM Hinge Half Overlay

3322-SC	No Dowels
3322-8D-SC	w/ Dowels

CASE QTY 200

INSET

110° Soft Close Clip-On CAM Hinge Inset

3333-SC	No Dowels
3333-8D-SC	w/ Dowels

CASE QTY 200

165° HINGE

165° SFX Series Soft Close Clip-On CAM Hinge F/O w/ 8mm Dowels

33165-8D-SC

CASE QTY 100

CORNER

45° SFX Series Corner Hinge Soft Close Clip-On CAM w/ Dowels

3345-8D-SC

CASE QTY 200

BLIND CORNER

90° SFX Series Corner Hinge Soft Close Clip-On CAM w/ Dowels

3390-8D-SC

CASE QTY 200

FULL OVERLAY

110 Deg +3mm Assembled Soft Close Hinge & Plate w/Dowels

33118DSC+3303CAMSC

CASE QTY 200

SFX SERIES

SOFT-CLOSE HINGES

FULL OVERLAY

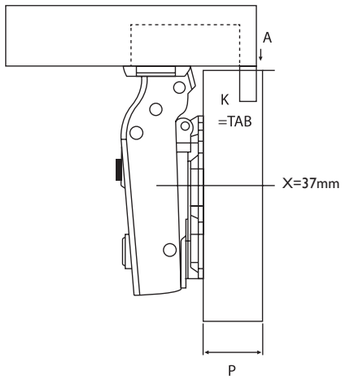

	P=	16	17	18	19
K=3	A=	1	2	3	4
K=4	A=	0	1	2	3
K=5	A=	-1	0	1	2
K=6	A=	-2	-1	0	1

P = Cabinet Panel Thickness
A = Cabinet Panel Reveal when door is closed
K = Tab or Drilling Distance from edge of door

Constant Distance
Full Overlay 12mm

HALF OVERLAY

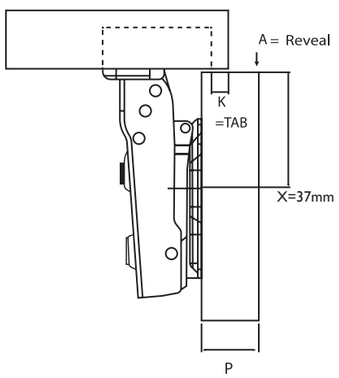

	P=	16	17	18	19
K=3	A=	10	11	12	13
K=4	A=	9	10	11	12
K=5	A=	8	9	10	11
K=6	A=	7	8	9	10

P = Cabinet Panel Thickness
A = Cabinet Panel Reveal when door is closed
K = Tab or Drilling Distance from edge of door

Constant Distance
Half Overlay 3mm

INSET

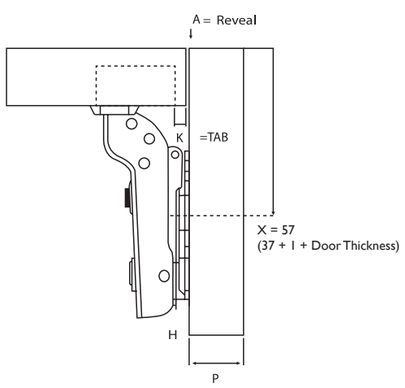

	K Distance	K=3	K=4	K=5	K=6
H=0	A=	3	2	1	0
H=2	A=	5	4	3	2

(H= Plate Thickness)
P = Cabinet Panel Thickness
A = Cabinet Panel Reveal when door is closed
K = Tab or Drilling Distance from edge of door

Constant Distance
Inset -6mm

SLX SERIES

SELF-CLOSE HINGES

SLX SERIES, ONLY AVAILABLE IN FULL OVERLAY

FULL OVERLAY

110 SLX Series Self Close Clip Hinge Full Overlay / works with Soft Close plates
3411 No Dowels
3411-8D w/ Dowels

CASE QTY 200

FULL OVERLAY

120 SLX Series Self Close Hinge Full Overlay W/Dowels
34120-8D w/ Dowels

CASE QTY 200

165° HINGE

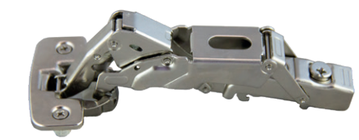

165° SLX Series Self Close Clip-On CAM Hinge F/O w/ 8mm Dowels / works with Soft Close plates
34165-8D

CASE QTY 100

FULL OVERLAY

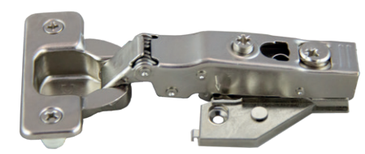

110 Deg +3mm SLX Series Assembled Self Close Hinge & Plate W/Dowels
34118DSC+3303CAMSC

CASE QTY 200

FULL OVERLAY

110 SLX Series Free Swing Hinge Full Overlay W/ 8mm Dowels
3111-8D

CASE QTY 200

FULL OVERLAY

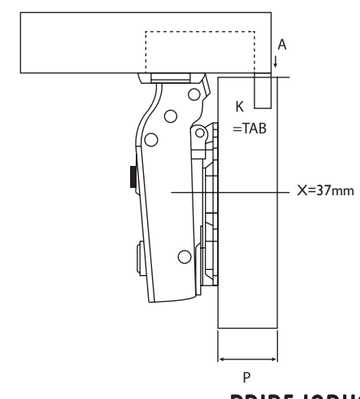

	P=	16	17	18	19
K=3	A=	1	2	3	4
K=4	A=	0	1	2	3
K=5	A=	-1	0	1	2
K=6	A=	-2	-1	0	1

P = Cabinet Panel Thickness
A = Cabinet Panel Reveal when door is closed
K = Tab or Drilling Distance from edge of door

Constant Distance
Full Overlay 12mm

SFX/SLX SERIES COMPATIBLE PLATES

FACE FRAME PLATE

Soft Close Face Frame Clip Plate
3300-SC 1mm 5/8" OL
3303-SC 3mm 1/2" OL

CASE QTY 200

FF PLATE WITH CAM ADJUSTMENT

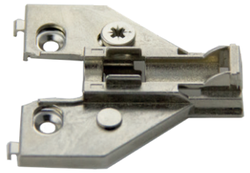

Cam Soft Close Face Frame Clip Plate
3300CAM-SC 0mm 5/8" OL
3303CAM-SC 3mm 1/2" OL
3306CAM-SC 6mm 3/8" OL

CASE QTY 200

STEEL FF PLATE W/CAM ADJUSTMENT

Steel CAM Soft Close Face Frame Clip Plate
3300STCAM-SC 0mm 5/8" Overlay
3303STCAM-SC 3mm 1/2" Overlay

CASE QTY 200

FRAMELESS STEEL PLATE W/CAM ADJUSTMENT

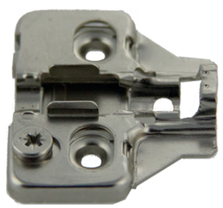

0mm Soft Close Cam Adjustable Euro Box Clip Plate. 3/4" OL
96T00TQ
96T02TQ Euro Screws

CASE QTY 200

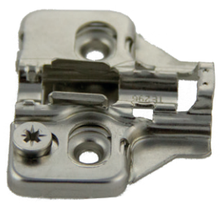

2mm Soft Close Cam Adjustable Euro Box Clip Plate 5/8" OL
96T20TQ
96T22TQ Euro Screws

CASE QTY 200

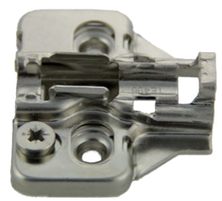

4mm Soft Close Cam Adjustable Euro Box Clip Plate 1/2" OL
96T40TQ
96T42TQ Euro Screws

CASE QTY 200

FRAMELESS STEEL PLATE

0mm Soft Close Euro Box Clip Plate
3300

CASE QTY 200

Soft Close Euro Box Clip Plate w/ System Screws
3300.S 0mm
3302.S 2mm
3304.S 4mm

CASE QTY 200

FF INSET PLATE WITH CAM ADJUSTMENT

Cam Soft Close Face Frame Plate for Inset application
3600-SC

CASE QTY 200

RESTRICTOR CLIP

Restrictor Clip for the 3311 series
3311RSTRCLIP

INNER BOX QTY 200
CASE QTY 2000

PRIDE INDUSTRIAL®
DECORATIVE HARDWARE
FUNCTIONAL HARDWARE
& MORE

EZ SNAP

SOFT CLOSE HINGES

EZ SNAP SOFT CLOSE HINGE

FULL OVERLAY

EZ Snap Soft Close 105° Clip-On Full Overlay Cam Hinge

ESF105	No Dowels
ESF105D	w/ Dowels

HALF OVERLAY

EZ Snap Soft Close 105° Clip-On Half Overlay Cam Hinge

ESHF105	No Dowels
ESHF105D	w/ Dowels

INSET

EZ Snap Soft Close 105° Clip-On Inset Cam Hinge

ESIN105	No Dowels
ESIN105D	w/ Dowels

30° HINGE

EZ Snap Soft Close 30° Clip-On Corner Hinge, With Dowel

ESC30D	w/ Dowels

45° HINGE

EZ Snap Soft Close 45° Clip-On Corner Hinge, With Dowel

ESC45D	w/ Dowels

90° HINGE

EZ Snap Soft Close 90° Clip-On Corner Hinge, With Dowel

ESC90D	w/ Dowels

160° HINGE

EZ Snap Soft Close 160º Clip-On Corner Hinge With Dowel

ESC0160D	w/ Dowels

EZ SNAP SELF CLOSE HINGE

EZ Snap Self Close 105° Clip-On Full Overlay Cam Hinge

E105F	No Dowels
E105FD	w/ Dowels

FRAMELESS STEEL PLATE

0mm Soft Close Euro Plate

EES0	System Screws
EE0	No Screws

2mm Soft Close Euro Plate

EES2	System Screws
EE2	No Screws

FRAMELESS STEEL PLATE W/CAM ADJUSTMENT

0mm Soft Close Cam Adj Plate

EECM0S	System Screws
EECM0	No Screws

2mm Soft Close Euro Plate

EECM2S	System Screws
EECM2	No Screws

FACE FRAME PLATE

Face Frame Steel Plate

EFF0	0 mm
EFF3	3 mm

FACE FRAME PLATE W/CAM ADJUSTMENT

Face Frame Steel Plate with Cam Adj

EFFCM0	0 mm
EFFCM3	3 mm

RESTRICTOR CLIP

Restrictor Clip for the EZ Snap hinge series

ESRSTRCLIP

CASE QTY	2000

PRIDE INDUSTRIAL®
DECORATIVE HARDWARE
FUNCTIONAL HARDWARE
& MORE

PIVOT-STAR

SPEED ADJUSTABLE SOFT CLOSE HINGES

THE GOLD STANDARD OF SOFT CLOSE HINGES

STANDOUT FEATURES INCLUDE

Speed adjustment cam screw enables hinge to handle multiple door weights.

Patented piston & mechanism allows consistent opening and closing at uniform speed without the feeling of pausing.

Less than 0.5mm door gap.

All new SNAP-FIT structure

ALL NEW SNAP-FIT STRUCTURE.
THE CONNECTIONS ARE TIGHT AND SECURE.
INSTALLATION AND DISMANTLING ARE MORE CONVENIENT.

It is quick to install and quick to disassemble.
The exquisite snap-fit design makes installation simple and convenient.

RUST RESISTANT
WITHSTANDS HIGH AND LOW TEMPERATURES

The hinges have achieved the testing standard for 30 hours of acidity
The damping effects are good under environmental testing at high temperatures of +122° F and low temperatures of -22° F

Opening the door is light and gentle, and the peak value of the door opening force is lower than 18.5 N

Closing the door is smooth, and the door is closed at a uniform speed without any feeling of pausing The door closing time is 3-5 seconds

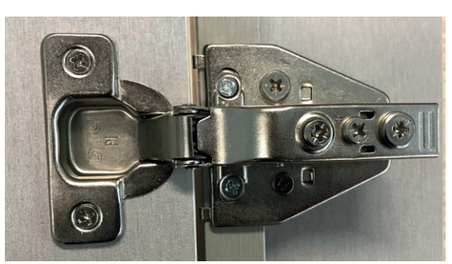

EUROPLATE & FACE-FRAME PLATES

GAP FOR DOOR OPENING

Owing to the meticulous design for the motion track, the gap at the door side is nearly invisible. When the door panel thickness is 19 mm and K = 5, the door side crack is only 1.4 mm

THE DOOR CLOSING SPEED IS ADJUSTABLE

One hinge for multiple door applications.

PIVOT STAR HINGE

FULL OVERLAY

110° F/O Soft Close hinge
W/Speed Adjustment

4411-SC	No Dowels
4411-8D-SC	w/ Dowels

CASE QTY 200

HALF OVERLAY

110° H/O Soft Close Hinge
W/Speed Adjustment

4422-SC	No Dowels
4422-8D-SC	w/ Dowels

CASE QTY 200

INSET

110° Inset Soft Close Hinge
W/Speed Adjustment

4433-SC	No Dowels
4433-8D-SC	w/ Dowels

CASE QTY 200

165° HINGE

165° Soft Close hinge
W/Speed Adjustment

4465-SC	No Dowels
4465-8D-SC	W/ Dowels

FRAMELESS STEEL PLATE

0mm Soft Close Box Clip Plate
for Pivot Star Hinge

4400	No Screws
4400.S	System Screws

W/CAM ADJUSTMENT

0mm Soft Close
Cam Adj Box Clip Plate

4400-CAM	No Screws
4400-CAM.S	System Screws

FACE FRAME PLATE

Soft Close Face Frame Plate for
Pivot Star Hinge

4401	1mm
4403	3mm

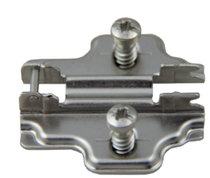

2mm Soft Close Box Clip Plate
for Pivot Star Hinge

4402	No Screws
4402.S	System Screws

2mm Soft Close Cam Adj Box
Clip Plate

4402-CAM	No Screws
4402-CAM.S	System Screws

FF PLATE WITH CAM ADJUSTMENT

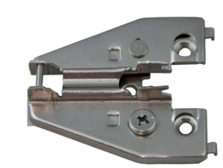

Soft Close Face Frame Plate with
Cam Adjustment

4401-CAM	1mm
4403-CAM	3mm

PIVOT-STAR

SPEED ADJUSTABLE SOFT CLOSE HINGES

FULL OVERLAY

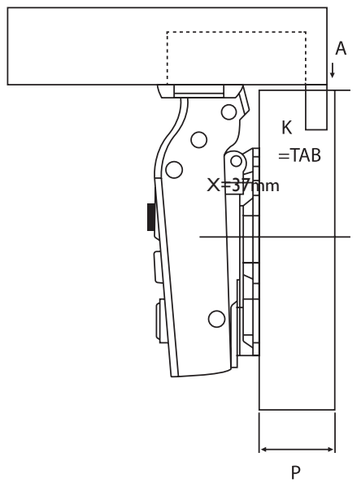

	P=	16	17	18	19
K=3	A=	1	2	3	4
K=4	A=	0	1	2	3
K=5	A=	-1	0	1	2
K=6	A=	-2	-1	0	1

P = Cabinet Panel Thickness
A = Cabinet Panel Reveal when door is closed
K = Tab or Drilling Distance from edge of door

Constant Distance
Full Overlay 12mm

HALF OVERLAY

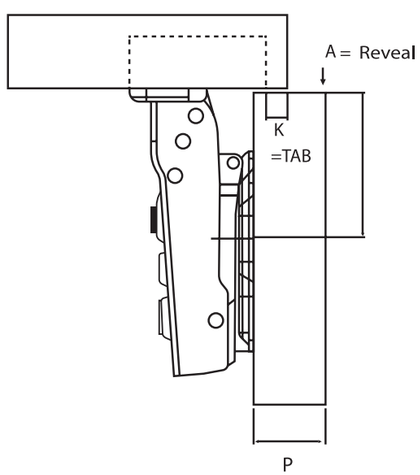

	P=	16	17	18	19
K=3	A=	10	11	12	13
K=4	A=	9	10	11	12
K=5	A=	8	9	10	11
K=6	A=	7	8	9	10

P = Cabinet Panel Thickness
A = Cabinet Panel Reveal when door is closed
K = Tab or Drilling Distance from edge of door

Constant Distance
Half Overlay 3mm

CONCEALED HINGE PRODUCT SPECIFICATIONS

INSET

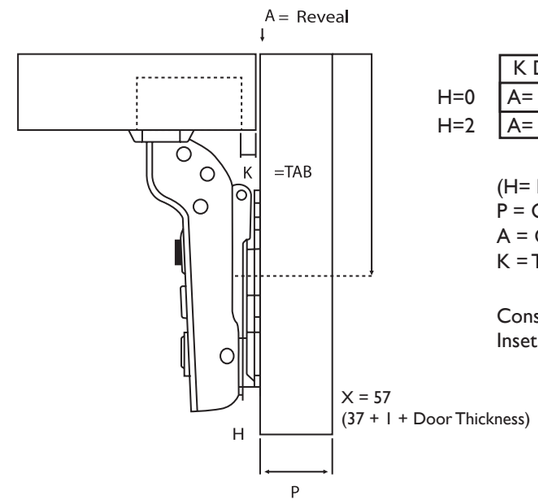

	K Distance	K=3	K=4	K=5	K=6
H=0	A=	3	2	1	0
H=2	A=	5	4	3	2

(H= Plate Thickness)
P = Cabinet Panel Thickness
A = Cabinet Panel Reveal when door is closed
K = Tab or Drilling Distance from edge of door

Constant Distance
Inset -6mm

SPACE NEEDED TO OPEN THE DOOR

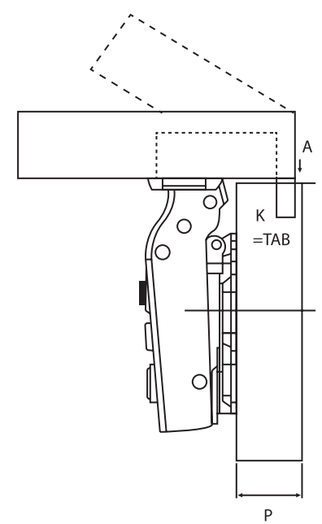

	T=	16	17	18	19	20
K=3	A=	0.7	0.9	1.2	1.5	1.8
K=4	A=	0.7	0.9	1.1	1.4	1.8
K=5	A=	0.6	0.9	1.1	1.4	1.7
K=6	A=	0.6	0.8	1.1	1.3	1.6

- T = Door thickness | - K = Drilling distance

SDX SERIES

STANDARD CONCEALED HINGES

FULL OVERLAY

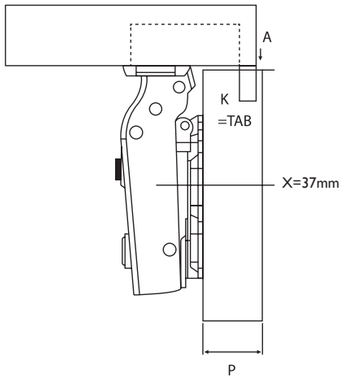

	P=	16	17	18	19
K=3	A=	1	2	3	4
K=4	A=	0	1	2	3
K=5	A=	-1	0	1	2
K=6	A=	-2	-1	0	1

P = Cabinet Panel Thickness
A = Cabinet Panel Reveal when door is closed
K = Tab or Drilling Distance from edge of door

Constant Distance
Full Overlay 12mm

HALF OVERLAY

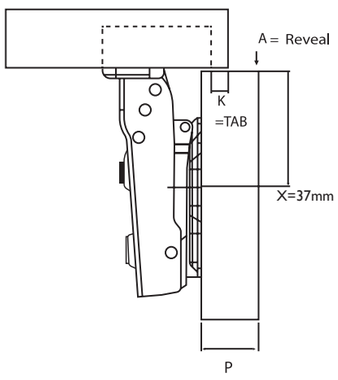

	P=	16	17	18	19
K=3	A=	10	11	12	13
K=4	A=	9	10	11	12
K=5	A=	8	9	10	11
K=6	A=	7	8	9	10

P = Cabinet Panel Thickness
A = Cabinet Panel Reveal when door is closed
K = Tab or Drilling Distance from edge of door

Constant Distance
Half Overlay 3mm

INSET

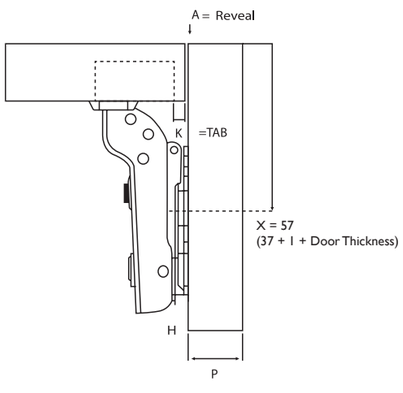

	K Distance	K=3	K=4	K=5	K=6
H=0	A=	3	2	1	0
H=2	A=	5	4	3	2

(H= Plate Thickness)
P = Cabinet Panel Thickness
A = Cabinet Panel Reveal when door is closed
K = Tab or Drilling Distance from edge of door

Constant Distance
Inset -6mm

PRIDE INDUSTRIAL®
DECORATIVE HARDWARE
FUNCTIONAL HARDWARE
& MORE

SDX SERIES

STANDARD CONCEALED HINGES

FULL OVERLAY 110°

Click On Hinge 110°, FO, SC
#633A.CL No Dowels
#634A.CL w/ Dowels
CASE QTY 200

FULL OVERLAY W/CAM ADJUSTMENT 110°

Click On Cam Hinge 110°, FO, SC, w/ Dowels
HCAM634A.CL
CASE QTY 200

HALF OVERLAY 110°

Click On Hinge 110°, HO, SC
#633B.CL No Dowels
#634B.CL w/ Dowels
CASE QTY 200

INSET 110°

Click On Hinge 110°, Inset, SC
#633C.CL No Dowels
#634C.CL w/ Dowels
CASE QTY 200

CORNER

Corner Clip-On Hinge w/ Dowels
H30-D.CL 30°
H45-D.CL 45°
CASE QTY 200

165° HINGE

Click On Hinge 165°, FO, SC
H51A.CL No Dowels
H52A.CL w/ Dowels
CASE QTY 100

PIE CORNER

Click On Pie Corner Hinge w/ Dowels
H80-D.CL
CASE QTY 200

BLIND CORNER

Click On Blind Corner Hinge no Dowels
H90.CL
CASE QTY 200

SDX SERIES

STANDARD CONCEALED HINGES

FACE-FRAME PLATES

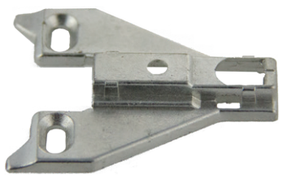

Click On 0mm
Face Frame Plate

FCL.0	5/8" Overlay
FCL.3	1/2" Overlay
FCL.6	3/8" Overlay
CASE QTY	200

Click On 0mm
Steel Face Frame Plate

FCL.S.0	5/8" Overlay
FCL.S.3	1/2" Overlay
FCL.S.6	3/8" Overlay
CASE QTY	200

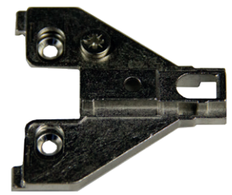

CAM Click On
Face Frame Plate

FCLCAM.0	0mm 5/8" OL
FCLCAM.3	3mm 1/2" OL
CASE QTY	200

FRAMELESS STEEL PLATE

Click On Steel Box Plate.
3/4" OL for frameless cabinets

CLK.0	0mm
CLK.2	2mm
CASE QTY	200

Click On Stamped Steel Box
Plate. 5/8" OL for
frameless cabinets

CLK.0S	0mm
CLK.2S	2mm
CLK.4S	4mm
CASE QTY	200

FRAMELESS STEEL PLATE W/CAM ADJUSTMENT

Steel Box Plate
w/ Cam Adjustment
without screw

T00TQ	0mm
T20TQ	2mm
CASE QTY	200

Steel Box Plate
w/ Cam Adjustment w/ Screws

T02TQ	0mm w/ Screws
T0CTQ	0mm w/ Dowels & Screws
T22TQ	2mm w/ Screws
T42TQ	4mm w/ Screws
CASE QTY	200

PRIDE INDUSTRIAL®
DECORATIVE HARDWARE
FUNCTIONAL HARDWARE
& MORE

SDX SERIES
STANDARD CONCEALED HINGES

SLIDE ON SDX SERIES

FULL OVERLAY

Slide On Hinge 110°, FO, SC

#633A.SO	No Dowels
CASE QTY	200

INSET

Slide On Hinge 110°, Inset,
SC no Dowels

#633C.SO	
CASE QTY	200

FRAMELESS PLATE

Slide On 0mm
Metal Box Plate
For Frameless Cabinets

SLO.0	3/4" OL
SLO.2	5/8" OL
CASE QTY	200

PRIDE INDUSTRIAL®
DECORATIVE HARDWARE
FUNCTIONAL HARDWARE
& MORE

COMPACT & SHORT ARM HINGES

SELF-CLOSE AND SOFT CLOSE

1 Pc Face Frame Hinge w/ Dowels

H250-D	1/2" OL
H254-D	3/4" OL
CASE QTY	200

Short Arm Face Frame Hinge =
3/8" OL

H275	No Dowels
CASE QTY	200

Short Arm Face Frame Hinge
w/ STEEL PLATE

H275.S-D	3/8" OL
H280.S-D	1/2" OL
CASE QTY	200

COMPACT & SHORT ARM HINGES

SELF-CLOSE AND SOFT CLOSE

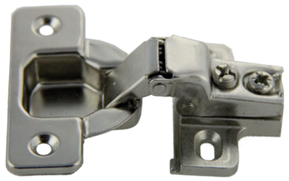

Short Arm Face Frame Hinge 1/2" OL
H280 No Dowels
H280-D w/ Dowels
CASE QTY 200

Short Arm Soft Close Face Frame CAM Hinge Plate 1/2" OL
HSA1C12-DSC w/ Dowels
HSA1C12-SC No Dowels
CASE QTY 200

Short Arm Self Close Face Frame CAM Hinge w/Cam Plate 1/2" OL with Dowels
HSA2C12-D w/ Dowels
CASE QTY 200

Short Arm Soft Close Face Frame CAM Hinge Cam Plate 1/2" OL
HSA2C12-DSC w/ Dowels
HSA2C12-SC No Dowels
CASE QTY 200

Short Arm Self Close 125 Deg Face Frame CAM Hinge w/Cam Plate 1/2" OL w/ Dowels
HSA2C25-D w/ Dowels
CASE QTY 200

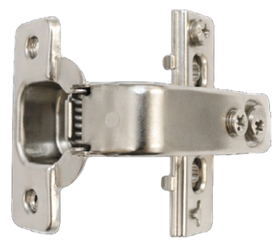

Short Arm Soft Close Inset 1pc hinge w/integrated plate 6-way CAM Adj w/ Dowel
HSA3-DSC w/ Dowels
HSA3-SC No Dowels
CASE QTY 200

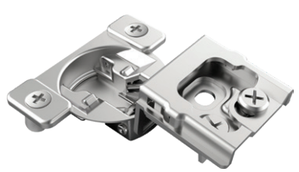

6 Way 3 Cam Adjustable 1 pc Face Frame 105 deg Hinge 1-1/4" OL
H292 No Dowels
H292-D w/ Dowels
CASE QTY 200

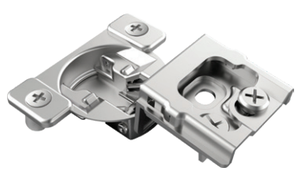

Soft Close 6 Way 3 Cam Adjustable 1 pc Face Frame 105 deg Hinge 1-1/4" OL
H292-SC No Dowels
H292-D-SC w/ Dowels
CASE QTY 200

4 Way 2 Cam Adjustable 1 pc Face Frame 105 deg Hinge 1/2" OL
H294 No Dowels
H294-D w/ Dowels
CASE QTY 200

PRIDE INDUSTRIAL®
DECORATIVE HARDWARE
FUNCTIONAL HARDWARE
& MORE

COMPACT & SHORT ARM HINGES

SELF-CLOSE AND SOFT CLOSE

Soft Close 4 Way 2 Cam Adjustable 1 pc Face Frame 105 deg Hinge w/ Dowels 1/2" OL
H294-SC No Dowels
H294-D-SC w/ Dowels
CASE QTY 200

4 Way 2 Cam Adjustable 1 pc Face Frame 105 deg Hinge 3/4" OL
H295 No Dowels
H295-D w/ Dowels
CASE QTY 200

Soft Close 4 Way 2 Cam Adjustable 1 pc Face Frame 105 deg Hinge 3/4" OL
H295-SC No Dowels
H295-D-SC w/ Dowels
CASE QTY 200

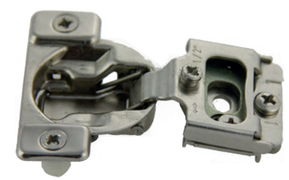

6 Way 3 Cam Adjustable 1 pc Face Frame 105 deg Hinge w/ Dowels 1/2" OL
H296-D
CASE QTY 200

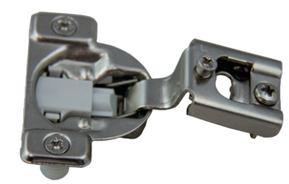

4 Way 2 Cam Adjustable 1 pc Face-Frame 105 deg Hinge w/ Dowels 1" OL
H298-D No Soft Close
H298-D-SC Soft Close
CASE QTY 200

Soft Close 6 Way 3 Cam Adjustable 2 Pc Face Frame Clip on Hinge w/ Dowel 1-1/4" OL
HCLP297DSC
HCLP297DSCUA
CASE QTY 200

RESTRICTOR CLIP

Restrictor Clip for Compact Hinges
CMPTRSTRCLIP
CASE QTY 200

CB-
Countertop Bracket
Thick Black Powder Coated

Size	Item Number	Case Qty	Weight/Case
10" x ¼"	CB-10.BK	10	18.1 lbs
14" x ¼"	CB-14.BK	10	22.7 lbs

LB-
" L" Bracket

Size	Colors	Item Number	Case	Weight/Case
3/4 x 3/4	Black	LB-3/4.BK	2 M	29 lbs
3/4 x 3/4	Zinc	LB-3/4.ZP	2 M	29 lbs
1 x 1	Zinc	LB-1.ZP	1 M	18 lbs
1.5 x 1.5	Zinc	LB-1.5.ZP	1 M	28 lbs
2 x 2	Zinc	LB-2.ZP	0.5 M	23.6 lbs
2.5 x 2.5	Zinc	LB-2.5.ZP	0.5 M	30 lbs
3 x 3	Zinc	LB-3.ZP	0.5 M	41 lbs
3.5 x 3.5	Zinc	LB-3.5.ZP	300	39 lbs
4 x 4	Zinc	LB-4.ZP	200	40 lbs

1M = 1,000

F-B
Black Flat Bracket

Size	Item Number	Case	Weight/Case
2 x 4	F-B 2 X 4.BK	200	32 lbs
2 x 6	F-B 2 X 6.BK	200	53 lbs
2-1/4 x 2-1/4	F-B 2-1/4.BK	300	30 lbs
3 x 6	F-B 3 x 6.BK	50	37.5 lbs

FIGURE 8
Heavy Duty Figure 8

CASE QTY 2M **WEIGHT/CASE** 23 lbs

MP-
Mending Plate Zinc Plated

Size	Item Number	Case Qty	Weight/Case
2"	MP-2.ZP	1 M	18 lbs
3"	MP-3.ZP	1 M	28 lbs
4"	MP-4.ZP	0.5M	18 lbs

1M = 1,000

CB90.
90 Degree Corner Bracket
1-1/4 x 1-1/4 x 2-1/4 Tall

CASE QTY 500 **WEIGHT/CASE** 36 lbs

Available Colors	Item Number
Black	CB90.BK
Zinc	CB90.ZP

CB94.BK
90 Degree Corner Bracket 3/4 x 5"

CASE QTY 500 **WEIGHT/CASE** 44 lbs

SS19-5MM.ZP
5mm x 24mm Straight Shelf Pin ZP

CASE QTY 5M **WEIGHT/CASE** 35 lbs

Available Colors	Item Number
Zinc Plated	SS19-5MM.ZP

SS20-5MM.ZP
5mm x 16mm Duplo Shelf Pin ZP

CASE QTY 5M **WEIGHT/CASE** 26 lbs

Available Colors	Item Number
Zinc Plated	SS20-5MM.ZP

SS21-5MM.
5mm Spoon Shaped Shelf Support

CASE QTY 5M **WEIGHT/CASE** 27.9 lbs
BOX QTY 1M

Available Colors	Item Number
Antique Brass	SS21-5MM.AB
Nickel	SS21-5MM.NI
Brass	SS21-5MM.PB

SS01-5MM.
5mm " L" Shaped Shelf Support

CASE QTY 2M **WEIGHT/CASE** 25 lbs
BOX QTY 1M

Available Colors	Item Number
Antique Brass	SS01-5MM.AB
Nickel	SS01-5MM.NI
Brass	SS01-5MM.PB

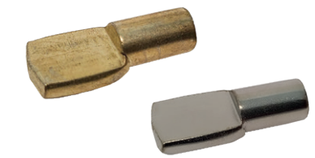

SS21-1/4.
1/4" Spoon Shaped Shelf Support

CASE QTY 3.5M **WEIGHT/CASE** 35 lbs
BOX QTY 0.1M

Available Colors	Item Number
Antique Brass	SS21-1/4.AB
Antique Copper	SS21-1/4.AC
Nickel	SS21-1/4.NI
Brass	SS21-1/4.PB

SS01-1/4.
1/4 " L" Shaped Shelf Support

CASE QTY 2M **WEIGHT/CASE** 31 lbs
BOX QTY 1M

Available Colors	Item Number
Antique Brass	SS01-1/4.AB
Nickel	SS01-1/4.NI
Brass	SS01-1/4.PB

B-3/4.WT
White Plastic Spacer Block 3/4

CASE QTY 1,000 **WEIGHT/CASE** 15.3 lbs

SL10WT
Plastic Locking Shelf Support
Shelf Lock 4.75mm Dia Pin
CASE QTY 3M **WEIGHT/CASE** 5.28 lbs

SS35-
Plastic Locking Shelf Support
5mm x 5/8" Shelf
CASE QTY 5M **WEIGHT/CASE** 31 lbs

Available Colors	Item Number
Clear	SS35-CLR
White	SS35-WT

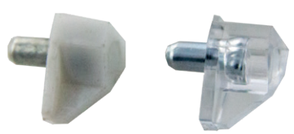

SS23.
Shelf Support w/ 5mm Metal Pin
CASE QTY 5M **WEIGHT/CASE** 37.7 lbs
BOX QTY 1M

Available Colors	Item Number
Clear	SS23.CLR
White	SS23.WT

SS36-
Plastic Locking Clear Shelf Support
5mm x 3/4" Shelf
CASE QTY 5M **WEIGHT/CASE** 31 lbs

Available Colors	Item Number
Clear	SS36-CLR
White	SS36-WT

RTA-
Connector Screw M4 Thread x 15mm Long
CASE QTY 4M
BOX QTY 1M

Available Colors	Item Number
Connector Screw	RTA-15.NI
Connector Sleeve 27mm	RTA-27.NI
Connector Sleeve 35mm	RTA-35.NI

RTA-3.
RTA 32mm Male & Female Fittings
CASE QTY 2,500 **WEIGHT/CASE** 26 lbs

Available Colors	Item Number
Brown	RTA-3.BN

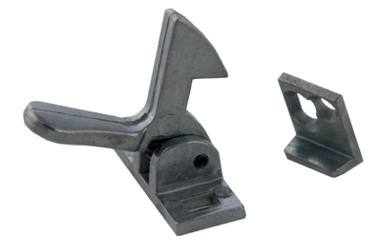

EC-14.AL
Elbow Catch Aluminum with Strike Plate
CASE QTY 1,000 **WEIGHT/CASE** 41 lbs
BOX QTY 100

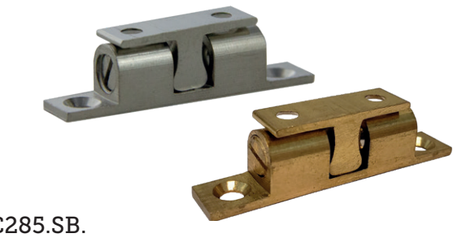

C285.SB.
2" Double Ball Catch Solid Brass
CASE QTY 1,000 **WEIGHT/CASE** 33 lbs
BOX QTY 50

Available Colors	Item Number
Nickel Plated	C285.SB.NI
Pollished Brass	C285.SB.PB

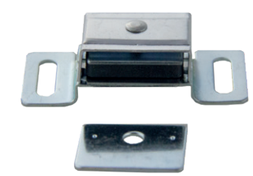

C241.AL
Regular Aluminum Mag Poly Bagged
w/ Plate & Screws
CASE QTY 500 **WEIGHT/CASE** 41 lbs
BOX QTY 50

Available Colors	Item Number
Aluminum	C241.AL

C242.AL
Heavy Duty Aluminum Mag Poly Bagged
w/ Plate & Screws
CASE QTY 500 **WEIGHT/CASE** 61.5 lbs
BOX QTY 50

Available Colors	Item Number
Aluminum	C242.AL

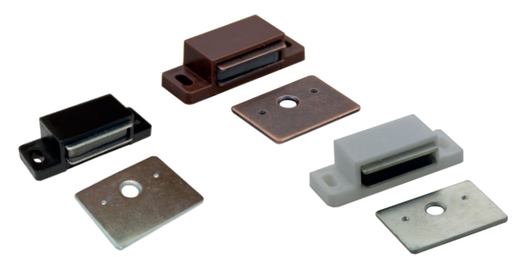

C509.
Single Mag Catch w/ Strike Plate & Screws
CASE QTY 1,000 **WEIGHT/CASE** 51 lbs
BOX QTY 100

Available Colors	Item Number
Black/Zinc Plate	C509.BK/ZP
Brown/Antique Copper	C509.BN/AC
White/Zinc Plate	C509.WT/ZP

C250.
Heavy Duty Mag Catch
w/ Strike Plate & Screws
CASE QTY 500 **WEIGHT/CASE** 46 lbs
BOX QTY 50

Available Colors	Item Number
Brown/Antique Copper	C250.BN/AC
White/Zinc Plate	C250.WT/ZP

C411.
Heavy Duty Double Roller Catch

CASE QTY	1,000	**WEIGHT/CASE**	41 lbs
BOX QTY	100		

Available Colors	**Item Number**
Antique Copper	C411.AC
Zinc Plated	C411.ZP

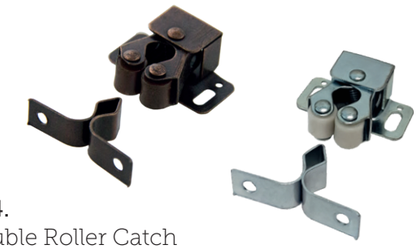

C04.
Double Roller Catch

CASE QTY	1,000	**WEIGHT/CASE**	41 lbs
BOX QTY	100		

Available Colors	**Item Number**
Antique Copper	C04.AC
Zinc Plated	C04.ZP

SP-245.BK
Glass Door Strike Plate Matte Black

CASE QTY	1,000	**WEIGHT/CASE**	31 lbs
BOX QTY	500		

Available Colors	**Item Number**
Matte Black	SP-245.BK

C907.
Single Mag Touch Latch Poly Bagged
w/ Screws & Plate

CASE QTY	1,000	**WEIGHT/CASE**	51 lbs
BOX QTY	250		

Available Colors	**Item Number**
Black	C907.BK
White	C907.WT

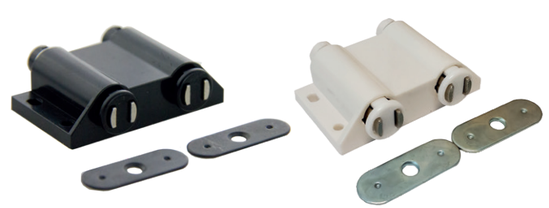

C927.
Double Mag Touch Latch Poly Bagged
w/ Screws & Plates

CASE QTY	500	**WEIGHT/CASE**	51 lbs
BOX QTY	125		

Available Colors	**Item Number**
Black	C927.BK
White	C927.WT

H739-RP.
Self Closing Flush Hinge
RETAIL Pack with Screws and Pads

CASE QTY	200	**WEIGHT/CASE**	33 lbs
BOX QTY	10		

Available Colors	**Item Number**	
Oil Rubbed Bronze	H739-RP.10B	
Antique Brass	H739-RP.AB	
Matte Black	H739-RP.BK	
Dull Nickel	H739-RP.DN	100/25 P

H739
Self Closing Flush Hinge

CASE QTY	200	**WEIGHT/CASE**	33 lbs

Available Colors	**Item Number**
Matte Black	H739.BK
Brass Plated	H739.BP
Dull Nickel	H739.DN
Chrome Plated	H739.PC
White	H739.WT

H650.AB
Armoire Hinge 270 Degree Antique Brass
3/4" OL x 3/4" Door

CASE QTY	200	**WEIGHT/CASE**	51 lbs

Available Colors	**Item Number**
Antique Brass	H650.AB

H130.NI
3 Leaf Flag Hinge Nickel Plate

CASE QTY	200	**WEIGHT/CASE**	25 lbs

Available Colors	**Item Number**
Nickel Plated	H130.NI

H123.
Shutter Butt Hinge 2-1/2" x 1-1/2" w/ Loose Pin

CASE QTY	500	**WEIGHT/CASE**	46 lbs
BOX QTY	50		

Available Colors	**Item Number**
Antique Brass	H123.AB
Almond	H123.AL
White	H123.WT

H145.
Non-Mortise Shutter Hinge 3" w/ Loose Pin

CASE QTY	500	**WEIGHT/CASE**	61 lbs
BOX QTY	50		

Available Colors	**Item Number**
Antique Brass	H145.AB
White	H145.WT

H124.
Shutter Butt Hinge 2-1/2" x 2-1/2"
w/ Loose Pin

CASE QTY 500 **WEIGHT/CASE** 86 lbs
BOX QTY 50

Available Colors	Item Number
Antique Brass	H124.AB
Almond	H124.AL
White	H124.WT

SHS-6.
Shutter Screw Flat Head Phillip Drive
6 x 3/4 Type 17

CASE QTY 10,000 **WEIGHT/CASE** 23 lbs
BOX QTY 1,000

Available Colors	Item Number
Antique Brass	SHS-6.AB
Almond	SHS-6.AL

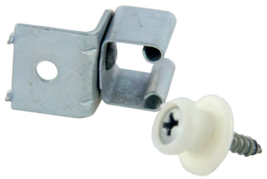

SHC-1.ZP
Shutter Catch OUTSET Zinc Plated

CASE QTY 1,000 **WEIGHT/CASE** 21 lbs
BOX QTY 100

SHC-2.
Shutter Catch INSET

CASE QTY 1,000 **WEIGHT/CASE** 21 lbs
BOX QTY 100

Available Colors	Item Number
Brass Plated	SHC-2.BP
White	SHC-2.WT
Zinc Plated	SHC-2.ZP

SHP-21.WT
Shutter Pin White

CASE QTY 10,000 **WEIGHT/CASE** 11 lbs
BOX QTY 2,500

Available Colors	Item Number
White	SHP-21.WT

SRP-30.WT
Shutter Repair Pin White pack

CASE QTY 10,000 **WEIGHT/CASE** 11 lbs
BOX QTY 1,000

Available Colors	Item Number
White	SRP-30.WT

CL50-
Cabinet Adjustable Leg
Satin Chrome & Black Wrinkle

Available Sizes	Item Number
4"	CL50-100.SC
6"	CL50-150.SC
8"	CL50-200.SC
4"	CL50-100.BKW
6"	CL50-150.BKW
8"	CL50-200.BKW

CASE QTY 24

CL40-
Cabinet Adjustable Leg W/Toe Kick Clip Option

Available Sizes	Item Number
3-3/4"	CL40-100
4-3/4"	CL40-120
5-3/4"	CL40-150
OPTIONAL CLIP	CL40-CLIP (1000/200) Set

CASE QTY 200 **BOX QTY** 50

GR186-45.BK
1-3/4" Plastic 2 pc Grommet Black

CASE QTY 1,000 **WEIGHT/CASE** 51 lbs

Available Colors	Item Number
Black	GR186-45.BK

GR188-60.
60mm Deluxe Plastic 3 pc Grommet

CASE QTY 500 **WEIGHT/CASE** 26 lbs

Available Colors	Item Number
Black	GR188-60.BK
Brown	GR188-60.BN
Gray	GR188-60.GRY
White	GR188-60.WT

GR190-80.
80mm Deluxe Plastic 3 pc Grommet

CASE QTY 300 **WEIGHT/CASE** 19 lbs

Available Colors	Item Number
Black	GR190-80.BK
Brown	GR190-80.BN
Gray	GR190-80.GRY
White	GR190-80.WT

GR187-51.
51mm Deluxe Plastic 3 pc Grommet

CASE QTY 1,000 **WEIGHT/CASE** 51 lbs
BOX QTY 200

Available Colors	Item Number
Black	GR187-51.BK
Brown	GR187-51.BN
Gray	GR187-51.GRY
White	GR187-51.WT

GR189-70.
70mm Deluxe Plastic 3 pc Grommet

CASE QTY 400 **WEIGHT/CASE** 25 lbs

Available Colors	Item Number	
Black	GR189-70.BK	
Brown	GR189-70.BN	
White	GR189-70.WT	(500)

GR1350-40.BK
1 pc Metal Grommet 40mm (1-3/4") Matte Black

CASE QTY 500 **WEIGHT/CASE** 32 lbs

Available Colors	Item Number
Black	GR1350-40.BK

PRIDE INDUSTRIAL®
DECORATIVE HARDWARE
FUNCTIONAL HARDWARE
& MORE

GROMMETS

GRE-71880003-
Electric Grommet, 80mm w/ 2 USB connections & power outlet

Available Colors	Item Number
Black	GRE-71880003-BK
Grey/Silver	GRE-71880003-GRY

GR22.BK
80mm 1 pc Grommet w/ Flexible Top Black

Available Colors	Item Number
Black	GR22.BK

GR63.
63mm (2-1/2") Plastic 2 pc Grommet

CASE QTY 200 **WEIGHT/CASE** 9 lbs

Available Colors	Item Number
Black	GR63.BK
White	GR63.WT

GR-82910.
63mm (2-1/2") 2 pc Metal Grommet

CASE QTY 150 **WEIGHT/CASE** 46 lbs
BOX QTY 15

Available Colors	Item Number
Black	GR-82910.BK
Satin Nickel	GR-82910.SN

GR76.
3" Plastic 2 pc Grommet

CASE QTY 100 **WEIGHT/CASE** 9 lbs

Available Colors	Item Number
Black	GR76.BK
Light Gray	GR76.LT-GRAY

B850.NP
Bed Rail Fastener 5" w/ Round Corners
Zinc Plated
CASE QTY 25 SETS **WEIGHT/CASE** 20 lbs

BKT-100
Breadboard Bracket
CASE QTY 200 **WEIGHT/CASE** 31 lbs

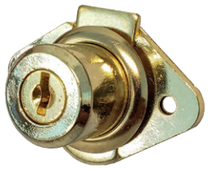

L35.KA.
7/8" Desk Lock Keyed Alike
CASE QTY 240 **WEIGHT/CASE** 39 lbs
BOX QTY 12

Available Colors	Item Number
Brass Plated	L35.KA.PB

FF
False Front Catch Metal Clip and Front Dowel
CASE QTY 100

FFS11	False Front Dowel
FFC11	False Front Metal Clip

TR
Stainless Steel Trash Ring

Available Sizes	Item Number	CASE QTY
6" Dia x 1" Deep	TR6X1.SS	108 pieces
6" Dia x 2" Deep	TR6X2.SS	60 pieces
6" Dia x 6" Deep	TR6X6.SS	24 pieces
8" Dia x 1" Deep	TR8X1.SS	72 pieces
8" Dia x 2" Deep	TR8X2.SS	42 pieces

SWIVEL-16.AL
Aluminum Swivel 16" 250 lbs Capacity
CASE QTY 10 **WEIGHT/CASE** 40 lbs

PT10.BK
Plastic Pencil Tray Black 5-1/2" x 12-3/4" x 1"
CASE QTY 100 **WEIGHT/CASE** 30 lbs

PRIDE INDUSTRIAL®
DECORATIVE HARDWARE
FUNCTIONAL HARDWARE
& MORE

NG58.
5/8" Plastic Nail Glide
CASE QTY 10M **WEIGHT/CASE** 35 lbs
BOX QTY 5M

Available Colors	Item Number
Tan	NG58.TN

TRAY
False Front Tray Plastic with no tab
CASE QTY 100

Available Sizes	Item Number
11"	TRAY 11.PLAS
14"	TRAY 14.PLAS

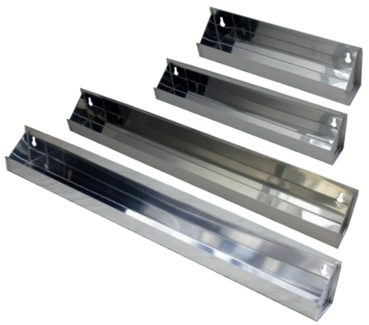

NG34.
3/4" Plastic Nail Glide
CASE QTY 10M **WEIGHT/CASE** 38 lbs
BOX QTY 5M

Available Colors	Item Number
Tan	NG34.TN
White	NG34.WT

NG78.
7/8" Plastic Nail Glide
CASE QTY 10M **WEIGHT/CASE** 41 lbs
BOX QTY 5M

Available Colors	Item Number
Tan	NG78.TN
White	NG78.WT

TRAY
False Front Tray Stainless Steel
CASE QTY 10

Available Sizes	Item Number
14"	TRAY 14.SS
16"	TRAY 16.SS
22"	TRAY 22.SS
25"	TRAY 25.SS

SW-16-40G
16" Stretch Wrap 40 Gauge

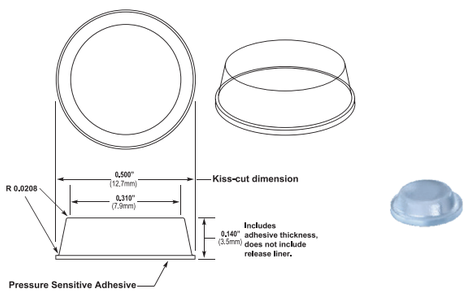

BS-1-SD-200-CLR
1/2" Dia x 1/8" Thick Clear Bump-On

Sold per Box

Per Box:	(5M) 5,000 pieces - 25 sheets
Per Sheet:	200 Pieces - 10 across x 20 down

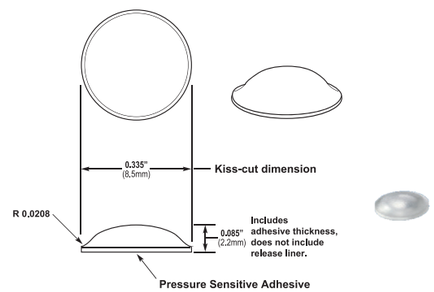

BS-7-SD-450-CLR
3/8" Dia x 1/16" Thick Clear Bump-On

Sold per Box

Per Box:	(5.4M) 5,400 pieces - 12 sheets
Per Sheet:	450 Pieces - 15 across x 30 down

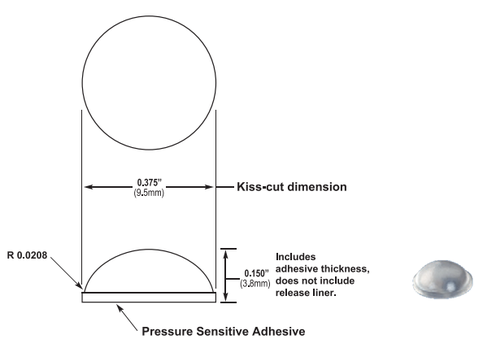

BS-12-SD-288-CLR
3/8" Dia x 1/8" Thick Clear Bump-On

Sold per Box

Per Box:	(7.2M) 7,200 pieces - 25 sheets
Per Sheet:	288 Pieces - 12 across x 24 down

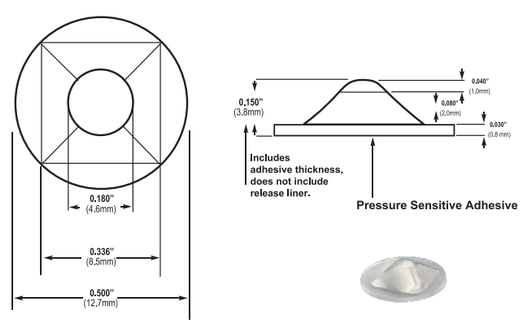

BS-33-SD-CLR
1/2" Dia x 3/16" Thick Clear Bump-On

Sold per Box

Per Box:	(5M) 5,000 pieces - 25 sheets
Per Sheet:	200 Pieces - 10 across x 20 down

PRODUCT INDEX

Symbols

#633A.CL 122
#633A.SO 124
#633B.CL 122
#633C.CL 122
#633C.SO 124
#634A.CL 122
#634B.CL 122
#634C.CL 122
3000 102
3111-8D 112
3300 114
3300.S 114
3300CAM-SC 113
3300STCAM-SC 113
3300-SC 113
3302.S 114
3303CAM-SC 113
3303STCAM-SC 113
3303-SC 113
3304.S 114
3306CAM-SC 113
3311-8D-SC 110
33118DSC+3303CAMSC 110
3311-SC 110
3311RSTRCLIP 114
33165-8D-SC 110
3322-8D-SC 110
3322-SC 110
3333-8D-SC 110
3333-SC 110
3345-8D-SC 110
3390-8D-SC 110
3411 112
3411-8D 112
34118DSC+3303CAMSC 112
34120-8D 112
34165-8D 112
3500 101
3600-SC 114
4000 103
4200 103
4400 118
4400.S 118
4400-CAM 118
4400-CAM.S 118
4401 118
4401-CAM 118
4402 118
4402.S 118
4402-CAM 118
4402-CAM.S 118
4403 118
4403-CAM 118
4411-8D-SC 118
4411-SC 118
4422-8D-SC 118
4422-SC 118
4433-8D-SC 118
4433-SC 118
4465-8D-SC 118
4465-SC 118
4600 98
4600-BRKT 98
4600-BRKTPI 98
4600-BRKTSO 98
4700 102
4800 99
4800-BRKT 99
4800-BRKTPI 99
4800-BRKTPI10 99
4800-BRKTSO 99
5000 101
5890 100
70BBDBL35PC 106
70BBSGL35PC 106
70BRKT 106
70TC35BK 106
70TC35GR 106
70TC35WT 106
72BMSC1821DBL 105
72TMSC1821DBL 105
96T00TQ 113
96T02TQ 113
96T20TQ 113
96T22TQ 113
96T40TQ 113
96T42TQ 113

A

"ADVANTAGE PRO (7800 Series)" 96

B

B-3/4.WT 128
B850.NP 137
BKT-100 137
BS-12-SD-288-CLR 139
BS-1-SD-200-CLR 139
BS-33-SD-CLR 139
BS-7-SD-450-CLR 139
BUNN-1 80
BUNN-2 80
BUNN-3 80
BUNN-6 80
BUNN-7 80
BUNN-8 80

C

C04 131
C241.AL 130
C242.AL 130
C250 130
C285.SB 130
C411 131
C509 130
C907 131
C927 131
CB 127
CB90 127
CB94.BK 127
CH-1003.PC 60
CH-81160.BK 60
CH-81160.PC 60
CH-8363.PC 60
CL40 134
CL50 134
CLK.0 123
CLK.0S 123
CLK.2 123
CLK.2S 123
CLK.4S 123
CORBEL-A-1 76
CORBEL-A-10 77
CORBEL-A-11 77
CORBEL-A-15 67
CORBEL-A-2 76
CORBEL-A-3 76
CORBEL-A-4 75
CORBEL-A-5 77
CORBEL-A-6 77
CORBEL-A-7 77
CORBEL-A-9 77
CORBEL-B 74
CORBEL-BW-1 76
CORBEL-C 74
CORBEL-D 75
CORBEL-K 67
CORBEL-KL 67
CORBEL-M-1 74
CORBEL-M-10 73
CORBEL-M-11 74
CORBEL-M-13 67
CORBEL-M-2 74
CORBEL-M-4 74
CORBEL-M-5 73
CORBEL-M-6 73
CORBEL-M-8 75
CORBEL-T-1 73
CORBEL-T-2 73
CORBEL-T-4 76
CORBEL-T-7 75
CORBEL-T-8 76
CR-50 61
CR-51.CP 61
CR-52 61
CR-60.CP 61
CR-62.CP 61
CR-70 61
CR-71.CP 61
CR-72.CP 61
CR-73.CP 61
CR-75.CP 61
CR-77.CP 61
CR-80 61
CR-81.CP 61
CRADJ1830 64
CRADJ3048 64
CRADJ4872 64
CRADJ7296 64
CRADJ96150 64
CRCS-58 62
CRCS-68.CP 62
CRCS-78 63
CRCS-88 63
CRS-54 62
CRS-56 62
CRS-64.CP 62
CRS-66.CP 62
CRS-74 63
CRS-76 63
CRS-84 63
CRS-85 63
CRS-86 63
CRS-87 63

E

E105F 116
E105FD 116
EC-14.AL 130
EE0 116
EE2 116
EECM0 116
EECM0S 116
EECM2 116
EECM2S 116
EES0 116
EES2 116
EFF0 116
EFF3 116
EFFCM0 116
EFFCM3 116
ESC0160D 116
ESC30D 116
ESC45D 116
ESC90D 116
ESF105 115
ESF105D 115
ESHF105 115
ESHF105D 115
ESIN105 115
ESIN105D 115
EUSKT-1-L 104
EUSKT-1-R 104
EUSKT-2-L 104

EUSKT-2-R 104
EUSKT-5-L 104
EUSKT-5-R 104
EUSKT-6 104

F

F-B 127
FCL.0 123
FCL.3 123
FCL.6 123
FCL.S.0 123
FCL.S.3 123
FCL.S.6 123
FCLCAM.0 123
FCLCAM.3 123
FF 137
FIGURE 8 127
"FORTE PRO 3/4 6X (8534 Series)" 94
"FORTE PRO 6X (8500 Series)" 93
FSBRKT 66
FSM1012 66
FSM1024 66
FSM1030 66
FSM1036 66
FSM1042 66
FSWALNUT12 66
FSWALNUT24 66
FSWALNUT30 66
FSWALNUT36 66
FSWALNUT42 66
FSWTOAK12 66
FSWTOAK24 66
FSWTOAK30 66
FSWTOAK36 66
FSWTOAK42 66

G

GR1350-40.BK 135
GR186-45.BK 135
GR187-51 135
GR188-60 135
GR189-70 135
GR190-80 135
GR22.BK 136
GR63 136
GR76 136
GR-82910 136
GRE-71880003 136

H

H123 132
H124 133
H130.NI 132
H145 132
H250-D 124
H254-D 124
H275 124
H275.S-D 124
H280 125
H280.S-D 124
H280-D 125
H292 125
H292-D 125
H292-D-SC 125
H292-SC 125
H294 125
H294-D 125
H294-D-SC 126
H294-SC 126
H295 126
H295-D 126
H295-D-SC 126
H295-SC 126
H296-D 126
H298-D 126
H298-D-SC 126
H30-D.CL 122
H45-D.CL 122
H51A.CL 122
H52A.CL 122
H650.AB 132
H739 132
H739-RP. 132
H740.DC 108
H760 108
H760.SS 108
H760-45 108
H780.DC 108
H80-D.CL 122
H90.CL 122
HCAM634A.CL 122
HCLP297DSC 126
HCLP297DSCUA 126
HSA1C12-DSC 125
HSA1C12-SC 125
HSA2C12-D 125
HSA2C12-DSC 125
HSA2C12-SC 125
HSA2C25-D 125
HSA3-DSC 125
HSA3-SC 125

K

K-1012.BK 59
K-102 31
K-102.SS 35
K-1218 19, 29
K-1667 46
K-3910 54
K-6361.SN 53
K-7141.BLAE 59
K-7141.SN 54
K-80576 49
K-80960 50
K-80980 52
K-810.SN 53
K-81021.SN 54
K-81091 30
K-81353 48
K-81361 23
K-81784 48
K-82115 49
K-82142.SN 58
K-82980 54
K-83125 26
K-83991 54
K-86618 47
K-910 53
K-91090 23
K-910H 53
K-92230 15, 17, 24, 43
K-92430 15, 17, 24, 43
K-928 52
K-92925 21
K-93002 13
K-93122 14
K-94723 21
K-94727 22
K-95003 12
K-970 52
K-971 52
K-972 47

L

L35.KA 137
LB 127
LEG-1 81
LEG-3 81
LEG-4 81
LEG-6 81
LS18RD.3TRAY 107
LS18RD.WT 107
LS24KD.WT 107
LS24RD.WT 107
LS28KD.WT 107
LS28RD.WT 107
LS32KD.WT 107

M

"MEGA PRO (90 series)" 83-84
MP 127

N

NG34 138
NG58 138
NG78 138

O

ONLAY-1-M 78
ONLAY-2-L 78
ONLAY-2-M 78
ONLAY-2-S 78

P

P-0136 37
P-0146 37
P-0178 37
P-092910 57
P-1011.BK 59
P-104 31
P-105.SS 35
P-106 31
P-1068H.SS 35
P-107.SN 32
P-107.SS 35
P-108 32
P-108H.SS 35
P-109.SN 32
P-109.SS 36
P-1096 31
P-1096.SS 35
P-1096H.BK 35
P-1096H.SS 35
P-110 32
P-112 32
P-113.SS 36
P-114 33
P-115.SS 36
P-116 33
P-118.SN 33
P-119.SS 36
P-120 33
P-122 33
P-122.SS 36
P-124 33
P-124.SS 36
P-126.SN 33
P-128 33
P-128.SS 36
P-130.SN 33
P-133.SS 36
P-1803 45
P-1806 45
P-1809 45
P-1812 45
P-1876 45
P-1879 45
P-21768 39
P-242.SN 37
P-29255.SS 42
P-353 51
P-354 51
P-355 51
P-356 51

P-370.SN 37
P-396 51
P-433 58
P-4655 55
P-50M 42
P-50S 42
P-675.BK/SS 57
P-7166.SN 56
P-72276.SN 38
P-72277.SN 38
P-72278.SN 38
P-80008 49
P-80014 46
P-8004.SN 57
P-80215 46
P-80281 50
P-80289 50
P-80290 50
P-80572 26
P-80753 44
P-80814 57
P-80846 46
P-80846.128 46
P-81065.SN 55
P-81092 30
P-81145 56
P-81235 40
P-81297 48
P-81366 47
P-81456 39
P-81458 39
P-81541 41
P-81542 41
P-81572 26
P-81837.DN 37
P-82034 40
P-82092 30
P-82103 40
P-82104 40
P-82106 40
P-82234 40
P-8233 44
P-82981 44
P-83063 49
P-83092 30
P-83572 26
P-847 58
P-86373 29
P-86374 29
P-86375 29
P-86718 47
P-86765 48
P-87140.SN 28
P-87215 41
P-87216 41
P-87218 41
P-87226 27
P-87227 27
P-87228 28
P-87229 28
P-87300 28
P-8731.SN 55
P-87328.SN 28
P-888.SN 56
P-90396 43
P-91296 24
P-91297 24
P-91298 24
P-91496 23
P-91497 23
P-91498 23
P-92836 22
P-92837 22
P-92838 22
P-92926 19
P-92927 20
P-92928 20
P-93096 16
P-93128 16
P-93160 16
P-94096 18
P-94128 18
P-94160 18
P-94210 18
P-95096 13
P-95128 13
P-95160 13
P-953 44
P-96096 14
P-96128 14
P-96160 14
P-97096 12
P-97128 12
P-97160 12
P-A012.SN 55
P-A51012 9
P-A51018 9
P-A5108 9
P-A52012 9
P-A5208 9
P-A53012 9
P-A53018 9
P-A5308 9
P-A54012 10
P-A54018 10
P-A5408 10
P-A55012 10
P-A5508 10
P-A56012 10
P-A56018 10
P-A5608 10
P-A57012 11
P-A5708 11
P-A58012 11
P-A5808 11
P-A59012 11
P-A59018 11
P-A5908 11
PB-9 79
PED-2-C 79
PED-C 79
PED-CR 79
PED-L 79
PED-M 79
PED-R 79
"PERFORM MAX 6X (9903 Series)" 87
"PERFORM PRO 2X (9800 Series)" 91
"PERFORM PRO 3/4 2X (8034 Series)" 92
"PERFORM PRO 3/4 6X (8834 Series)" 90
"PERFORM PRO 6X (9880 Series)" 89
POST-A 70
POST-A-5X36 71
POST-A-5X42 72
POST-A-H 69
POST-B 70
POST-B-5X36 71
POST-B-H 69
POST-C 70
POST-C-5X36 71
POST-C-H 69
POST-D 70
POST-E 70
POST-F-5X36 72
POST-G 70
POST-G-5X36 72
POST-G-H 69
POST-K 68
POST-K-5X42 68
POST-M-5X36 72
POST-M-H 69
POST-S 68
POST-S-5X42 68
POST-T 71
POST-X 68
POST-X-5X42 68
"PUSHSYNC (73POEU)" 88
PT10.BK 137

R

RTA 129
RTA-3 129

S

SHC-1.ZP 133
SHC-2 133
SHP-21.WT 133
SHS-6 133
SL10WT 129
SLO.0 124
SLO.2 124
"SOFT PRO X (4903 Series)" 97
SP-245.BK 131
SRP-30.WT 133
SS01-1/4 128
SS01-5MM 128
SS19-5MM.ZP 128
SS20-5MM.ZP 128
SS21-1/4 128
SS21-5MM 128
SS23 129
SS35 129
SS36 129
SW-16-40G 139
SWIVEL-16.AL 137
"SYNC PRO (61SF)" 85-86

T

T00TQ 123
T02TQ 123
T0CTQ 123
T20TQ 123
T22TQ 123
T42TQ 123
TBS 75
TBT 75
TR 137
TRAY 138

TERMS & CONDITIONS

All sales are expressly conditioned on Buyer's agreement to the terms and conditions set forth below. Any order or statement of intent to purchase goods, or any direction to proceed with procurement or shipment of goods, or any acceptance of or payment for goods shall constitute Buyer's agreement to those terms and conditions.No other representative of Seller is authorized to modify these terms and conditions, or to agree to any additional or different terms or conditions.

New Orders

All new orders must be submitted in writing. They can either be emailed to: sales@prideindustrial.com or faxed to 909-334-4377

Will Call

Pride Industrial requires a 3 hour window for will call orders. If an early pick-up is required, the order must be submitted and confirmed the day before the pick-up. If a truck or carrier will be picking up, please request an appointment to avoid delays.

Will Call hours are from 10:00 AM to 3:00 PM, Monday through Friday. Hours subject to change without notice.

Shipping

Unless otherwise noted on the purchase order, Pride Industrial reserves the right to choose the best shipping method and bill for freight charges.

Return Policy

1) For products without defect and or no error in order preparation /shipping on Pride's part, we can accept return:

- Within 48 hours of order placing with 0% restocking fee.
- After 48 hours but within 10 days from order placing date: 10% restocking fee.
- After 10 days up to 90 days from order placing date: 20% restocking fee.
- No return is accepted after 90 days.
- All products for return must be in factory original packaging and be in resalable condition.
- No returns will be accepted at Pride without a RMA attached to the return.
- Freight will be prepaid by customer.

NOTE:
SPECIAL ORDER ITEMS MAY NOT BE RETURNED.

2) For products with possible defect and or error in order preparation/shipping on Pride's part:

- There will be no restocking fee.
- But return must be secured with RMA in order that is accepted for a credit or merchandise exchange.
- Original packaging must be relatively in good condition for a full credit, otherwise some fees may apply if new boxes must be purchased and products have to be repackaged.

Claims

Goods in transit travel at the risk of the purchaser. Damage and/or shortage must be noted upon receipt and be countersigned by the delivering carrier's agent. We will be pleased to furnish any information or assistance needed to establish a customer's claim against the carrier. Within 3 days after tender of, delivery to or receipt of any shipment and before any part of the material has been changed from its original condition, Buyer shall inform Seller in writing if the material is found defective or short in any respect. Seller is not liable for loss or damage in transit.

Responsibility

We assume no liability for damage to person or property caused by merchandise bought from us. All specifications and engineering information have been reproduced for our customer's convenience only. Pride Industrial shall not be liable for any special indirect, incidental or consequential damages, including (but not limited to) loss of profits or revenue; loss of use of the goods or related goods, damage or injury to the person or property of Buyer or others. The remedies of Buyer set forth herein are exclusive and Seller's liability on any claim for loss or damage arising out of the sale of goods or arising out of anything done in connection with such a sale, whether in contract or tort or under warranty or otherwise, shall not exceed the price of the product or part on which such liability is based.

Pride Industrial LLC 909-334-4388

ADA FRIENDLY

AMERICANS WITH DISABILITIES ACT

ADA – Friendly

Many of the decorative pulls offered by Pride are designed with accessibility and ergonomics in mind. Collections that carry the ADA-Friendly designation feature the clearance necessary, based on the Dreyfus Human Factor Scale, to accommodate the hand of an average man. Our ADA-Friendly pulls are shaped for ease of grip and don't require tight grasping, pinching or twisting, as prescribed in Section 309.4 of the ADA Accessibility Guidelines (ADAAG)

PRIDE INDUSTRIAL

PRIDE DÉCOR®

WELCOME TO THE PRIDE

LOCATIONS

15221 FAIRFIELD RANCH ROAD
UNIT 120
CHINO HILLS, CA 91709

4653 LESTON STREET
SUITE 701
DALLAS, TX 75247

909-334-4388

WWW.PRIDEDECOR.COM

ESTABLISHED IN 2005