# PRIDE INDUSTRIAL LLC®

## PRODUCT CATALOGUE 2024

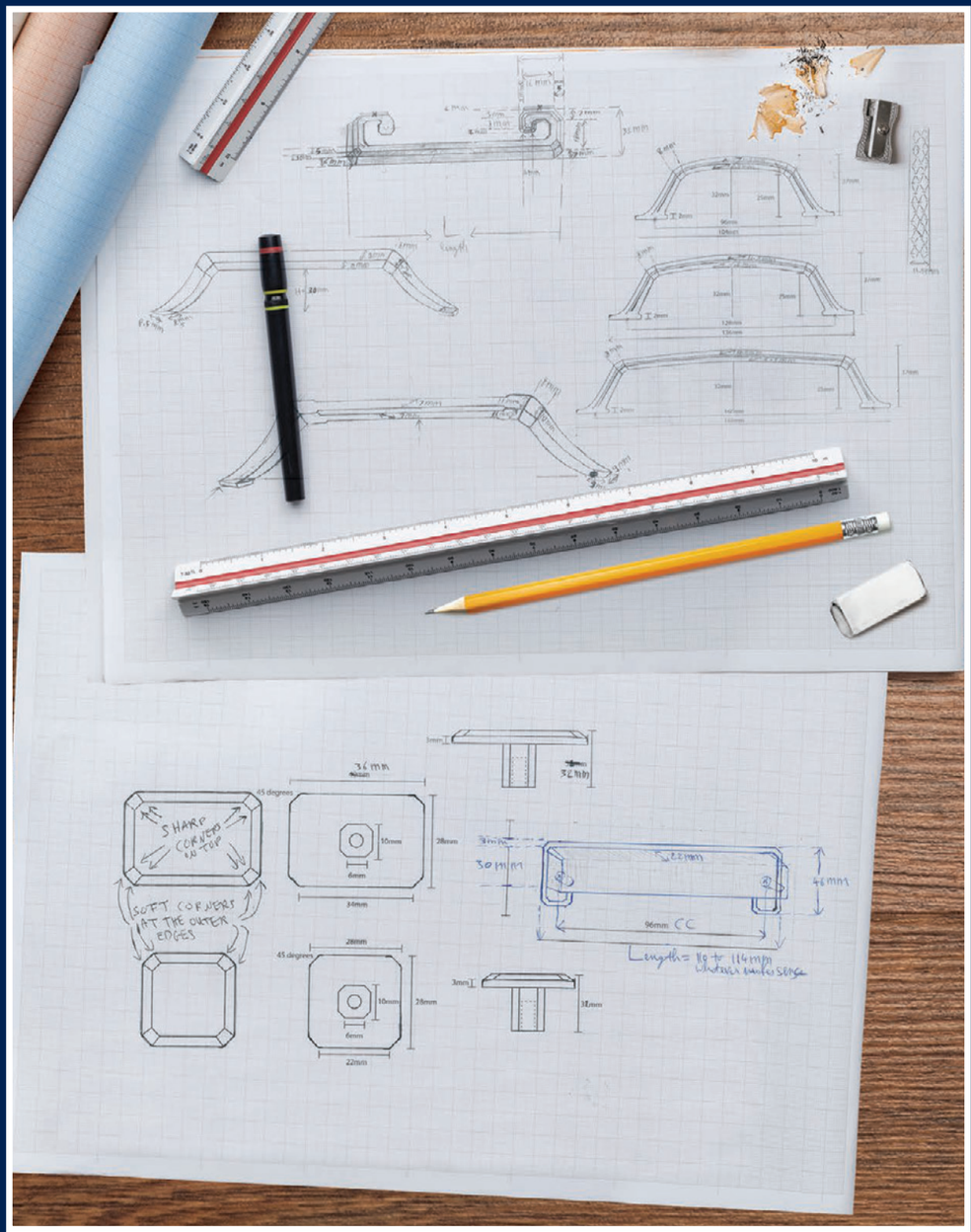


*Our inhouse designers are dedicated to crafting and creating Pride Décor's truly unique cabinet hardware for high-end residential & commercial projects as well as the most popular designs for multi-family and single-family living. Our attention to detail starts with each design's inception, our goal is to stun in every final look we create. Discover our designs and feel inspired.*

# TABLE OF CONTENTS


| | |
|---|---|
| Knobs & Pulls | 1-61 |
| Closet Rods & Fittings | 62-64 |
| Decorative Wood | 65-82 |
| Slides | 83-104 |
| Kitchen Organization | 105-107 |
| Institutional Hinges | 108 |
| European Hinges & Plates | 109-125 |
| Coutertop Bracket, L-brackets & Mending Plates | 126 |
| Shelf Support, Rta & Catches | 127-130 |
| Shutter Hardware | 131-133 |
| Leg Hardware | 134 |
| Grommets | 135-136 |
| Levelers, Bump-on, etc | 137-139 |

# Magnificent Collections

## Patented Designs

### Size Extensions Collection

page 7-9

### Valencia Collection

page 10

### Florence Collection

page 11

### Monaco Collection

page 12

# Magnificent Collections

## Patented Designs

### Madison Collection

page 13-14

### Milan Collection

page 15-16

### Manhattan Collection

page 17-18

## Colorado Collection

page 19-20

## St. Louis Collection

page 21

## Washington Collection

page 22

## Miami Collection

page 24

## Square Pull Collection

page 25-26

## Vail Collection

page 27

## Charlotte Collection

page 28

## Bar Pull Collection

page 29-35

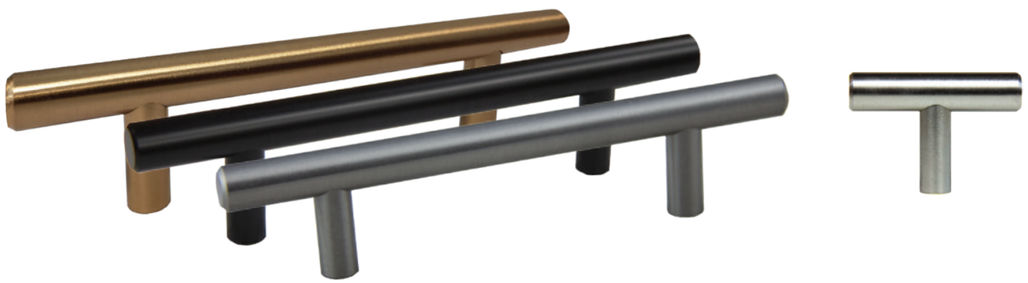

## Large Selection of Modern Handles

page 37-39

## Charleston Collection

page 41

## Cup Pulls Collection

page 42

## Large Selection of Tab Pulls

page 43-44

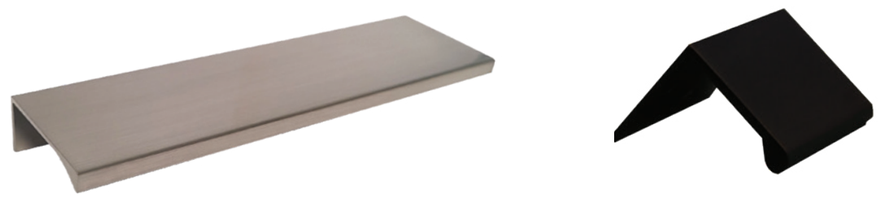

# Pride Décor® Size Extensions Collection

Miami | Charlotte | Manhattan | Colorado

### P-A5108
Miami Appliance Pull 8" C/C

| | | | |
|---|---|---|---|
| CASE QTY | 50 | WEIGHT/CASE | 13.87 lbs |
| BOX QTY | 5 | PROJECTION | 27 mm |
| LENGTH | 227.2 mm | WIDTH | 8.3 mm |

| Available Colors | Item Number |
|---|---|
| Matte Black | P-A5108.BK |
| Rose Gold | P-A5108.RG |
| Satin Nickel | P-A5108.SN |

### P-A51018 NEW
Miami Appliance Pull 18" C/C

| | | | |
|---|---|---|---|
| CASE QTY | 10 | WEIGHT/CASE | 16.4 lbs |
| BOX QTY | 5 | PROJECTION | 43.6 mm |
| LENGTH | 500.6 mm | WIDTH | 15 mm |

| Available Colors | Item Number |
|---|---|
| Matte Black | P-A51018.BK |
| Rose Gold | P-A51018.RG |
| Satin Nickel | P-A51018.SN |

### P-A52012
Charlotte Appliance Pull 12" C/C

| | | | |
|---|---|---|---|
| CASE QTY | 20 | WEIGHT/CASE | 15.71 lbs |
| BOX QTY | 5 | PROJECTION | 39 mm |
| LENGTH | 321.9 mm | WIDTH | 19.9 mm |

| Available Colors | Item Number |
|---|---|
| Matte Black | P-A52012.BK |
| Rose Gold | P-A52012.RG |
| Satin Nickel | P-A52012.SN |

### P-A53012
Manhattan Appliance Pull 12" C/C

| | | | |
|---|---|---|---|
| CASE QTY | 20 | WEIGHT/CASE | 18.88 lbs |
| BOX QTY | 5 | PROJECTION | 38 mm |
| LENGTH | 341.1 mm | WIDTH | 21.7 mm |

| Available Colors | Item Number |
|---|---|
| Matte Black | P-A53012.BK |
| Rose Gold | P-A53012.RG |
| Satin Nickel | P-A53012.SN |

### P-A51012
Miami Appliance Pull 12" C/C

| | | | |
|---|---|---|---|
| CASE QTY | 20 | WEIGHT/CASE | 21.52 lbs |
| BOX QTY | 5 | PROJECTION | 43.6 mm |
| LENGTH | 348.2 mm | WIDTH | 15 mm |

| Available Colors | Item Number |
|---|---|
| Matte Black | P-A51012.BK |
| Rose Gold | P-A51012.RG |
| Satin Nickel | P-A51012.SN |

### P-A5208
Charlotte Appliance Pull 8" C/C

| | | | |
|---|---|---|---|
| CASE QTY | 50 | WEIGHT/CASE | 18.93 lbs |
| BOX QTY | 5 | PROJECTION | 29.5 mm |
| LENGTH | 218.3 mm | WIDTH | 19.7 mm |

| Available Colors | Item Number |
|---|---|
| Matte Black | P-A5208.BK |
| Rose Gold | P-A5208.RG |
| Satin Nickel | P-A5208.SN |

### P-A5308
Manhattan Appliance Pull 8" C/C

| | | | |
|---|---|---|---|
| CASE QTY | 50 | WEIGHT/CASE | 19.04 lbs |
| BOX QTY | 5 | PROJECTION | 30 mm |
| LENGTH | 230.4 mm | WIDTH | 16.3 mm |

| Available Colors | Item Number |
|---|---|
| Matte Black | P-A5308.BK |
| Rose Gold | P-A5308.RG |
| Satin Nickel | P-A5308.SN |

### P-A53018 NEW
Manhattan Appliance Pull 18" C/C

| | | | |
|---|---|---|---|
| CASE QTY | 10 | WEIGHT/CASE | 17.6 lbs |
| BOX QTY | 5 | PROJECTION | 38 mm |
| LENGTH | 493.5 mm | WIDTH | 21.85 mm |

| Available Colors | Item Number |
|---|---|
| Matte Black | P-A53018.BK |
| Rose Gold | P-A53018.RG |
| Satin Nickel | P-A53018.SN |



Pride Décor® Size Extensions Collection

**18" NOW AVAILABLE**
Valencia - Colorado
Manhattan - Miami
Square Pull

Vail | Modern | Monaco | Milan

### P-A5408
Colorado Appliance Pull 8" C/C

| | | | |
|---|---|---|---|
| CASE QTY | 50 | WEIGHT/CASE | 22.67 lbs |
| BOX QTY | 5 | PROJECTION | 32 mm |
| LENGTH | 225.2 mm | WIDTH | 16 mm |

| Available Colors | Item Number |
|---|---|
| Matte Black | P-A5408.BK |
| Rose Gold | P-A5408.RG |
| Satin Nickel | P-A5408.SN |

### P-A54018 NEW
Colorado Appliance Pull 18" C/C

| | | | |
|---|---|---|---|
| CASE QTY | 10 | WEIGHT/CASE | 15.7 lbs |
| BOX QTY | 5 | PROJECTION | 40 mm |
| LENGTH | 484.7 mm | WIDTH | 20 mm |

| Available Colors | Item Number |
|---|---|
| Matte Black | P-A54018.BK |
| Rose Gold | P-A54018.RG |
| Satin Nickel | P-A54018.SN |

### P-A55012
Vail Appliance Pull 12" C/C

| | | | |
|---|---|---|---|
| CASE QTY | 20 | WEIGHT/CASE | 32.26 lbs |
| BOX QTY | 5 | PROJECTION | 59.1 mm |
| LENGTH | 336.6 mm | WIDTH | 25.1 mm |

| Available Colors | Item Number |
|---|---|
| Matte Black | P-A55012.BK |
| Rose Gold | P-A55012.RG |
| Satin Nickel | P-A55012.SN |

### P-A56012
Modern Square Appliance Pull 12" C/C

| | | | |
|---|---|---|---|
| CASE QTY | 10 | WEIGHT/CASE | 20.38 lbs |
| BOX QTY | 5 | PROJECTION | 58.5 mm |
| LENGTH | 323.8 mm | WIDTH | 19 mm |

| Available Colors | Item Number |
|---|---|
| Matte Black | P-A56012.BK |
| Rose Gold | P-A56012.RG |
| Satin Nickel | P-A56012.SN |

### P-A54012
Colorado Appliance Pull 12" C/C

| | | | |
|---|---|---|---|
| CASE QTY | 20 | WEIGHT/CASE | 20.07 lbs |
| BOX QTY | 5 | PROJECTION | 40 mm |
| LENGTH | 332.3 mm | WIDTH | 20 mm |

| Available Colors | Item Number |
|---|---|
| Matte Black | P-A54012.BK |
| Rose Gold | P-A54012.RG |
| Satin Nickel | P-A54012.SN |

### P-A5508
Vail Appliance Pull 8" C/C

| | | | |
|---|---|---|---|
| CASE QTY | 50 | WEIGHT/CASE | 13.87 lbs |
| BOX QTY | 5 | PROJECTION | 37.5 mm |
| LENGTH | 224.8 mm | WIDTH | 19.1 mm |

| Available Colors | Item Number |
|---|---|
| Matte Black | P-A5508.BK |
| Rose Gold | P-A5508.RG |
| Satin Nickel | P-A5508.SN |

### P-A5608
Modern Square Appliance Pull 8" C/C

| | | | |
|---|---|---|---|
| CASE QTY | 50 | WEIGHT/CASE | 18.93 lbs |
| BOX QTY | 5 | PROJECTION | 35 mm |
| LENGTH | 213.2 mm | WIDTH | 10.4 mm |

| Available Colors | Item Number |
|---|---|
| Matte Black | P-A5608.BK |
| Rose Gold | P-A5608.RG |
| Satin Nickel | P-A5608.SN |

### P-A56018 NEW
Modern Square Appliance Pull 18" C/C

| | | | |
|---|---|---|---|
| CASE QTY | 10 | WEIGHT/CASE | 24.4 lbs |
| BOX QTY | 5 | PROJECTION | 48.5 mm |
| LENGTH | 476.2 mm | WIDTH | 18 mm |

| Available Colors | Item Number |
|---|---|
| Matte Black | P-A56018.BK |
| Rose Gold | P-A56018.RG |
| Satin Nickel | P-A56018.SN |

# Pride Décor® Size Extensions Collection

## Valencia

### P-A5708
Monaco Appliance Pull 8" C/C

| | | | |
|---|---|---|---|
| CASE QTY | 40 | WEIGHT/CASE | 33.54 lbs |
| BOX QTY | 5 | PROJECTION | 29.6 mm |
| LENGTH | 264.4 mm | WIDTH | 44 mm |

| Available Colors | Item Number |
|---|---|
| Matte Black | P-A5708.BK |
| Rose Gold | P-A5708.RG |
| Satin Nickel | P-A5708.SN |

### P-A5808
Milan Appliance Pull 8" C/C

| | | | |
|---|---|---|---|
| CASE QTY | 50 | WEIGHT/CASE | 16.51 lbs |
| BOX QTY | 5 | PROJECTION | 40.5 mm |
| LENGTH | 228.2 mm | WIDTH | 10 mm |

| Available Colors | Item Number |
|---|---|
| Matte Black | P-A5808.BK |
| Rose Gold | P-A5808.RG |
| Satin Nickel | P-A5808.SN |

### P-A5908
Valencia Appliance Pull 8" C/C

| | | | |
|---|---|---|---|
| CASE QTY | 50 | WEIGHT/CASE | 16.51 lbs |
| BOX QTY | 5 | PROJECTION | 39 mm |
| LENGTH | 226.2 mm | WIDTH | 14 mm |

| Available Colors | Item Number |
|---|---|
| Matte Black | P-A5908.BK |
| Rose Gold | P-A5908.RG |
| Satin Nickel | P-A5908.SN |

### P-A59018 **NEW**
Valencia Appliance Pull 18" C/C

| | | | |
|---|---|---|---|
| CASE QTY | 10 | WEIGHT/CASE | 22 lbs |
| BOX QTY | 5 | PROJECTION | 45 mm |
| LENGTH | 489.2 mm | WIDTH | 20 mm |

| Available Colors | Item Number |
|---|---|
| Matte Black | P-A59018.BK |
| Rose Gold | P-A59018.RG |
| Satin Nickel | P-A59018.SN |

### P-A57012
Monaco Appliance Pull 12" C/C

| | | | |
|---|---|---|---|
| CASE QTY | 20 | WEIGHT/CASE | 21.65 lbs |
| BOX QTY | 5 | PROJECTION | 41.2 mm |
| LENGTH | 366 mm | WIDTH | 44 mm |

| Available Colors | Item Number |
|---|---|
| Matte Black | P-A57012.BK |
| Rose Gold | P-A57012.RG |
| Satin Nickel | P-A57012.SN |

### P-A58012
Milan Appliance Pull 12" C/C

| | | | |
|---|---|---|---|
| CASE QTY | 40 | WEIGHT/CASE | 30.02 lbs |
| BOX QTY | 5 | PROJECTION | 43 mm |
| LENGTH | 331.8 mm | WIDTH | 14.4 mm |

| Available Colors | Item Number |
|---|---|
| Matte Black | P-A58012.BK |
| Rose Gold | P-A58012.RG |
| Satin Nickel | P-A58012.SN |

### P-A59012
Valencia Appliance Pull 12" C/C

| | | | |
|---|---|---|---|
| CASE QTY | 20 | WEIGHT/CASE | 31.4 lbs |
| BOX QTY | 5 | PROJECTION | 45 mm |
| LENGTH | 336.8 mm | WIDTH | 20 mm |

| Available Colors | Item Number |
|---|---|
| Matte Black | P-A59012.BK |
| Rose Gold | P-A59012.RG |
| Satin Nickel | P-A59012.SN |



# Pride Décor® Valencia Collection

*Pending Patent*

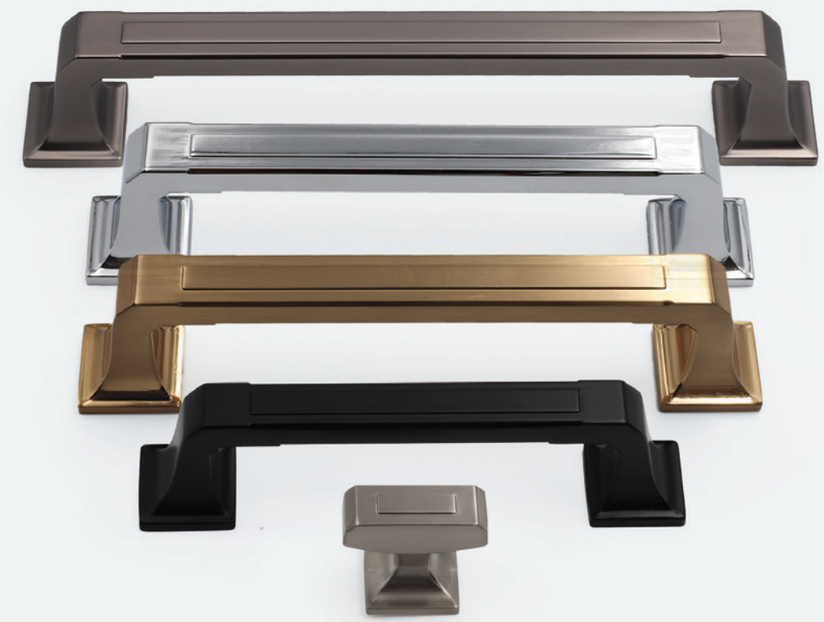

### K-95003
Valencia Knob 38mm

| | | | |
|---|---|---|---|
| CASE QTY | 200 | WEIGHT/CASE | 28.4 lbs |
| BOX QTY | 20 | PROJECTION | 32mm |
| LENGTH | 25mm | WIDTH | 25mm |

| Available Colors | Item Number |
|---|---|
| Oil Rubbed Bronze | K-95003.10B |
| Matte Black | K-95003.BK |
| Dark Pewter | K-95003.DP |
| Polished Chrome | K-95003.PC |
| Rose Gold | K-95003.RG |
| Satin Nickel | K-95003.SN |

### P-97128
Valencia Pull 128mm C/C

| | | | |
|---|---|---|---|
| CASE QTY | 60 | WEIGHT/CASE | 23.64 lbs |
| BOX QTY | 10 | PROJECTION | 35mm |
| LENGTH | 151mm | WIDTH | 23mm |

| Available Colors | Item Number |
|---|---|
| Oil Rubbed Bronze | P-97128.10B |
| Matte Black | P-97128.BK |
| Dark Pewter | P-97128.DP |
| Polished Chrome | P-97128.PC |
| Rose Gold | P-97128.RG |
| Satin Nickel | P-97128.SN |

### P-97096
Valencia Pull 96mm C/C

| | | | |
|---|---|---|---|
| CASE QTY | 100 | WEIGHT/CASE | 26 lbs |
| BOX QTY | 10 | PROJECTION | 32mm |
| LENGTH | 117mm | WIDTH | 21mm |

| Available Colors | Item Number |
|---|---|
| Oil Rubbed Bronze | P-97096.10B |
| Matte Black | P-97096.BK |
| Dark Pewter | P-97096.DP |
| Polished Chrome | P-97096.PC |
| Rose Gold | P-97096.RG |
| Satin Nickel | P-97096.SN |

### P-97160
Valencia Pull 160mm C/C

| | | | |
|---|---|---|---|
| CASE QTY | 60 | WEIGHT/CASE | 27.78 lbs |
| BOX QTY | 10 | PROJECTION | 35mm |
| LENGTH | 183mm | WIDTH | 23mm |

| Available Colors | Item Number |
|---|---|
| Oil Rubbed Bronze | P-97160.10B |
| Matte Black | P-97160.BK |
| Dark Pewter | P-97160.DP |
| Polished Chrome | P-97160.PC |
| Rose Gold | P-97160.RG |
| Satin Nickel | P-97160.SN |

# Pride Décor® Florence Collection

*Patented Design*

## K-93002
Florence Knob 39.5mm

| | | | |
|---|---|---|---|
| CASE QTY | 100 | WEIGHT/CASE | 27 lbs |
| BOX QTY | 10 | PROJECTION | 32.5mm |
| LENGTH | 39.5mm | WIDTH | 39.5mm |

| Available Colors | Item Number |
|---|---|
| Oil Rubbed Bronze | K-93002.10B |
| Matte Black | K-93002.BK |
| Dark Pewter | K-93002.DP |
| Polished Chrome | K-93002.PC |
| Rose Gold | K-93002.RG |
| Satin Nickel | K-93002.SN |

## P-95128
Florence Pull 128mm C/C

| | | | |
|---|---|---|---|
| CASE QTY | 100 | WEIGHT/CASE | 52 lbs |
| BOX QTY | 25 | PROJECTION | 46mm |
| LENGTH | 167mm | WIDTH | 11mm |

| Available Colors | Item Number |
|---|---|
| Oil Rubbed Bronze | P-95128.10B |
| Matte Black | P-95128.BK |
| Dark Pewter | P-95128.DP |
| Polished Chrome | P-95128.PC |
| Rose Gold | P-95128.RG |
| Satin Nickel | P-95128.SN |

## P-95096
Florence Pull 96mm C/C

| | | | |
|---|---|---|---|
| CASE QTY | 100 | WEIGHT/CASE | 46 lbs |
| BOX QTY | 10 | PROJECTION | 46mm |
| LENGTH | 135mm | WIDTH | 11mm |

| Available Colors | Item Number |
|---|---|
| Oil Rubbed Bronze | P-95096.10B |
| Matte Black | P-95096.BK |
| Dark Pewter | P-95096.DP |
| Polished Chrome | P-95096.PC |
| Rose Gold | P-95096.RG |
| Satin Nickel | P-95096.SN |

## P-95160
Florence Pull 160mm C/C

| | | | |
|---|---|---|---|
| CASE QTY | 50 | WEIGHT/CASE | 31 lbs |
| BOX QTY | 10 | PROJECTION | 46mm |
| LENGTH | 200mm | WIDTH | 11mm |

| Available Colors | Item Number |
|---|---|
| Oil Rubbed Bronze | P-95160.10B |
| Matte Black | P-95160.BK |
| Dark Pewter | P-95160.DP |
| Polished Chrome | P-95160.PC |
| Rose Gold | P-95160.RG |
| Satin Nickel | P-95160.SN |



# Pride Décor® Monaco Collection

*Patented Design*

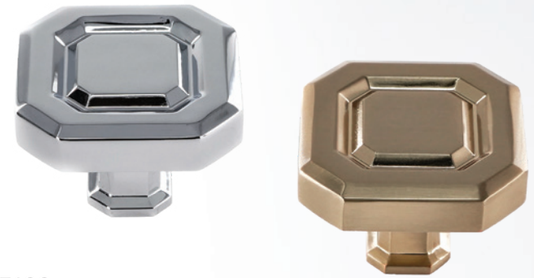

## K-93122
Monaco Knob 45mm

| | | | |
|---|---|---|---|
| CASE QTY | 100 | WEIGHT/CASE | 35 lbs |
| BOX QTY | 10 | PROJECTION | 33mm |
| LENGTH | 45mm | WIDTH | 45mm |

| Available Colors | Item Number |
|---|---|
| Oil Rubbed Bronze | K-93122.10B |
| Matte Black | K-93122.BK |
| Dark Pewter | K-93122.DP |
| Polished Chrome | K-93122.PC |
| Rose Gold | K-93122.RG |
| Satin Nickel | K-93122.SN |

## P-96096
Monaco Pull 96mm C/C

| | | | |
|---|---|---|---|
| CASE QTY | 100 | WEIGHT/CASE | 56 lbs |
| BOX QTY | 10 | PROJECTION | 30mm |
| LENGTH | 157mm | WIDTH | 11mm |

| Available Colors | Item Number |
|---|---|
| Oil Rubbed Bronze | P-96096.10B |
| Matte Black | P-96096.BK |
| Dark Pewter | P-96096.DP |
| Polished Chrome | P-96096.PC |
| Rose Gold | P-96096.RG |
| Satin Nickel | P-96096.SN |

## P-96128
Monaco Pull 128mm C/C

| | | | |
|---|---|---|---|
| CASE QTY | 50 | WEIGHT/CASE | 33 lbs |
| BOX QTY | 10 | PROJECTION | 30mm |
| LENGTH | 189mm | WIDTH | 11mm |

| Available Colors | Item Number |
|---|---|
| Oil Rubbed Bronze | P-96128.10B |
| Matte Black | P-96128.BK |
| Dark Pewter | P-96128.DP |
| Polished Chrome | P-96128.PC |
| Rose Gold | P-96128.RG |
| Satin Nickel | P-96128.SN |

## P-96160
Monaco Pull 160mm C/C

| | | | |
|---|---|---|---|
| CASE QTY | 50 | WEIGHT/CASE | 36 lbs |
| BOX QTY | 10 | PROJECTION | 30mm |
| LENGTH | 221mm | WIDTH | 11mm |

| Available Colors | Item Number |
|---|---|
| Oil Rubbed Bronze | P-96160.10B |
| Matte Black | P-96160.BK |
| Dark Pewter | P-96160.DP |
| Polished Chrome | P-96160.PC |
| Rose Gold | P-96160.RG |
| Satin Nickel | P-96160.SN |

PRIDE DÉCOR®

# Madison Collection

ADA FRIENDLY ✓

**K-92230**
28mm Square Knob

| | | | |
|---|---|---|---|
| CASE QTY | 250 | WEIGHT/CASE | 23 lbs |
| BOX QTY | 25 | PROJECTION | 26mm |
| LENGTH | 28mm | WIDTH | 28mm |

| Available Colors | Item Number |
|---|---|
| Oil Rubbed Bronze | K-92230.10B |
| Matte Black | K-92230.BK |
| Dark Pewter | K-92230.DP |
| Polished Chrome | K-92230.PC |
| Rose Gold | K-92230.RG |
| Satin Nickel | K-92230.SN |

**K-92430**
36x28 Rectangular Knob

| | | | |
|---|---|---|---|
| CASE QTY | 250 | WEIGHT/CASE | 25 lbs |
| BOX QTY | 25 | PROJECTION | 26mm |
| LENGTH | 36mm | WIDTH | 28mm |

| Available Colors | Item Number |
|---|---|
| Oil Rubbed Bronze | K-92430.10B |
| Matte Black | K-92430.BK |
| Dark Pewter | K-92430.DP |
| Polished Chrome | K-92430.PC |
| Rose Gold | K-92430.RG |
| Satin Nickel | K-92430.SN |



Patented Design

**P-93096** ✓
Madison Pull 96mm C/C

| | | | |
|---|---|---|---|
| CASE QTY | 250 | WEIGHT/CASE | 54.5 lbs |
| BOX QTY | 25 | PROJECTION | 39mm |
| LENGTH | 122mm | WIDTH | 13mm |

| Available Colors | Item Number |
|---|---|
| Oil Rubbed Bronze | P-93096.10B |
| Matte Black | P-93096.BK |
| Dark Pewter | P-93096.DP |
| Polished Chrome | P-93096.PC |
| Rose Gold | P-93096.RG |
| Satin Nickel | P-93096.SN |

**P-93128** ✓
Madison Pull 128mm C/C

| | | | |
|---|---|---|---|
| CASE QTY | 250 | WEIGHT/CASE | 64 lbs |
| BOX QTY | 25 | PROJECTION | 39mm |
| LENGTH | 154mm | WIDTH | 13mm |

| Available Colors | Item Number |
|---|---|
| Oil Rubbed Bronze | P-93128.10B |
| Matte Black | P-93128.BK |
| Dark Pewter | P-93128.DP |
| Polished Chrome | P-93128.PC |
| Rose Gold | P-93128.RG |
| Satin Nickel | P-93128.SN |

**P-93160** ✓
Madison Pull 160mm C/C

| | | | |
|---|---|---|---|
| CASE QTY | 200 | WEIGHT/CASE | 48 lbs |
| BOX QTY | 20 | PROJECTION | 39mm |
| LENGTH | 186mm | WIDTH | 13mm |

| Available Colors | Item Number |
|---|---|
| Oil Rubbed Bronze | P-93160.10B |
| Matte Black | P-93160.BK |
| Dark Pewter | P-93160.DP |
| Polished Chrome | P-93160.PC |
| Rose Gold | P-93160.RG |
| Satin Nickel | P-93160.SN |

PRIDE DÉCOR®

# Milan Collection

ADA FRIENDLY ✓

### K-92230
28mm Square Knob

| | | | |
|---|---|---|---|
| CASE QTY | 250 | WEIGHT/CASE | 23 lbs |
| BOX QTY | 25 | PROJECTION | 26mm |
| LENGTH | 28mm | WIDTH | 28mm |

| Available Colors | Item Number |
|---|---|
| Oil Rubbed Bronze | K-92230.10B |
| Matte Black | K-92230.BK |
| Dark Pewter | K-92230.DP |
| Polished Chrome | K-92230.PC |
| Rose Gold | K-92230.RG |
| Satin Nickel | K-92230.SN |

### K-92430
36x28 Rectangular Knob

| | | | |
|---|---|---|---|
| CASE QTY | 250 | WEIGHT/CASE | 25 lbs |
| BOX QTY | 25 | PROJECTION | 26mm |
| LENGTH | 36mm | WIDTH | 28mm |

| Available Colors | Item Number |
|---|---|
| Oil Rubbed Bronze | K-92430.10B |
| Matte Black | K-92430.BK |
| Dark Pewter | K-92430.DP |
| Polished Chrome | K-92430.PC |
| Rose Gold | K-92430.RG |
| Satin Nickel | K-92430.SN |



Patented Design

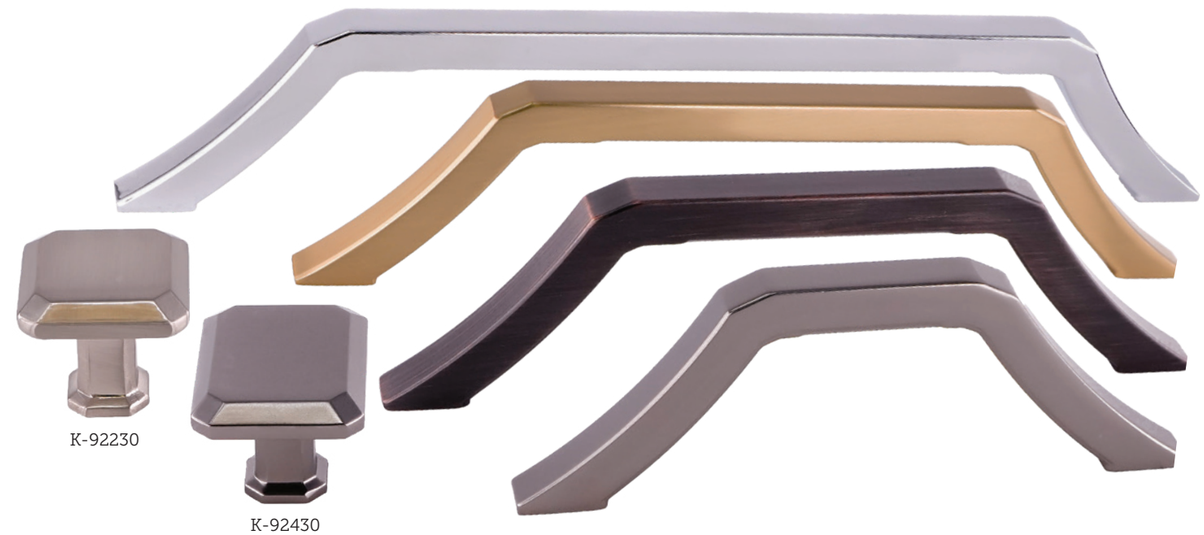


### P-94096 ✓
Milan Pull 96mm C/C

| | | | |
|---|---|---|---|
| CASE QTY | 200 | WEIGHT/CASE | 37 lbs |
| BOX QTY | 20 | PROJECTION | 39mm |
| LENGTH | 121mm | WIDTH | 10mm |

| Available Colors | Item Number |
|---|---|
| Oil Rubbed Bronze | P-94096.10B |
| Matte Black | P-94096.BK |
| Dark Pewter | P-94096.DP |
| Polished Chrome | P-94096.PC |
| Rose Gold | P-94096.RG |
| Satin Nickel | P-94096.SN |

### P-94160 ✓
Milan Pull 160mm C/C

| | | | |
|---|---|---|---|
| CASE QTY | 200 | WEIGHT/CASE | 51 lbs |
| BOX QTY | 20 | PROJECTION | 39mm |
| LENGTH | 185mm | WIDTH | 10mm |

| Available Colors | Item Number |
|---|---|
| Oil Rubbed Bronze | P-94160.10B |
| Matte Black | P-94160.BK |
| Dark Pewter | P-94160.DP |
| Polished Chrome | P-94160.PC |
| Rose Gold | P-94160.RG |
| Satin Nickel | P-94160.SN |

### P-94128 ✓
Milan Pull 128mm C/C

| | | | |
|---|---|---|---|
| CASE QTY | 200 | WEIGHT/CASE | 43 lbs |
| BOX QTY | 20 | PROJECTION | 39mm |
| LENGTH | 153mm | WIDTH | 10mm |

| Available Colors | Item Number |
|---|---|
| Oil Rubbed Bronze | P-94128.10B |
| Matte Black | P-94128.BK |
| Dark Pewter | P-94128.DP |
| Polished Chrome | P-94128.PC |
| Rose Gold | P-94128.RG |
| Satin Nickel | P-94128.SN |

### P-94210 ✓
Milan Pull 210mm C/C

| | | | |
|---|---|---|---|
| CASE QTY | 100 | WEIGHT/CASE | 32 lbs |
| BOX QTY | 25 | PROJECTION | 39mm |
| LENGTH | 234.5mm | WIDTH | 10mm |

| Available Colors | Item Number |
|---|---|
| Oil Rubbed Bronze | P-94210.10B |
| Matte Black | P-94210.BK |
| Dark Pewter | P-94210.DP |
| Polished Chrome | P-94210.PC |
| Rose Gold | P-94210.RG |
| Satin Nickel | P-94210.SN |

# Manhattan Collection

Patented Design

**K-1218**
32mm Round Flat Top

| | | | |
|---|---|---|---|
| **CASE QTY** | 250 | **WEIGHT/CASE** | 44 lbs |
| **BOX QTY** | 25 | **PROJECTION** | 30mm |
| **DIAMETER** | 32mm | | |

| Available Colors | Item Number |
|---|---|
| Oil Rubbed Bronze | K-1218.10B |
| Matte Black | K-1218.BK |
| Dark Pewter | K-1218.DP |
| Polished Chrome | K-1218.PC |
| Rose Gold | K-1218.RG |
| Satin Nickel | K-1218.SN |

**P-92926**
Manhattan Pull 96mm C/C

| | | | |
|---|---|---|---|
| **CASE QTY** | 150 | **WEIGHT/CASE** | 39.33 lbs |
| **BOX QTY** | 15 | **PROJECTION** | 28mm |
| **LENGTH** | 123mm | **WIDTH** | 16mm |

| Available Colors | Item Number |
|---|---|
| Oil Rubbed Bronze | P-92926.10B |
| Matte Black | P-92926.BK |
| Dark Pewter | P-92926.DP |
| Polished Chrome | P-92926.PC |
| Rose Gold | P-92926.RG |
| Satin Nickel | P-92926.SN |

**P-92927**
Manhattan Pull 128mm C/C

| | | | |
|---|---|---|---|
| **CASE QTY** | 100 | **WEIGHT/CASE** | 30.38 lbs |
| **BOX QTY** | 10 | **PROJECTION** | 28mm |
| **LENGTH** | 155mm | **WIDTH** | 16mm |

| Available Colors | Item Number |
|---|---|
| Oil Rubbed Bronze | P-92927.10B |
| Matte Black | P-92927.BK |
| Dark Pewter | P-92927.DP |
| Polished Chrome | P-92927.PC |
| Rose Gold | P-92927.RG |
| Satin Nickel | P-92927.SN |

**P-92928**
Manhattan Pull 160mm C/C

| | | | |
|---|---|---|---|
| **CASE QTY** | 100 | **WEIGHT/CASE** | 33 lbs |
| **BOX QTY** | 10 | **PROJECTION** | 28mm |
| **LENGTH** | 187mm | **WIDTH** | 16mm |

| Available Colors | Item Number |
|---|---|
| Oil Rubbed Bronze | P-92928.10B |
| Matte Black | P-92928.BK |
| Dark Pewter | P-92928.DP |
| Polished Chrome | P-92928.PC |
| Rose Gold | P-92928.RG |
| Satin Nickel | P-92928.SN |

# Colorado Collection

## K-92925
32mm Dia Colorado Round Knob

| | | | |
|---|---|---|---|
| CASE QTY | 250 | WEIGHT/CASE | 44.88 lbs |
| BOX QTY | 25 | PROJECTION | 29.5mm |
| DIAMETER | 32mm | | |

| Available Colors | Item Number |
|---|---|
| Oil Rubbed Bronze | K-92925.10B |
| Matte Black | K-92925.BK |
| Dark Pewter | K-92925.DP |
| Polished Chrome | K-92925.PC |
| Rose Gold | K-92925.RG |
| Satin Nickel | K-92925.SN |

## K-94723
29.8mm Colorado Square Knob

| | | | |
|---|---|---|---|
| CASE QTY | 200 | WEIGHT/CASE | 39 lbs |
| BOX QTY | 20 | PROJECTION | 30mm |
| LENGTH | 29.8mm | WIDTH | 29.8mm |

| Available Colors | Item Number |
|---|---|
| Oil Rubbed Bronze | K-94723.10B |
| Matte Black | K-94723.BK |
| Dark Pewter | K-94723.DP |
| Polished Chrome | K-94723.PC |
| Rose Gold | K-94723.RG |
| Satin Nickel | K-94723.SN |



Patented Design

## K-94727
37mm Colorado Square Oversized Knob

| | | | |
|---|---|---|---|
| CASE QTY | 100 | WEIGHT/CASE | 27 lbs |
| BOX QTY | 10 | PROJECTION | 30mm |
| LENGTH | 37mm | WIDTH | 37mm |

| Available Colors | Item Number |
|---|---|
| Oil Rubbed Bronze | K-94727.10B |
| Matte Black | K-94727.BK |
| Dark Pewter | K-94727.DP |
| Polished Chrome | K-94727.PC |
| Rose Gold | K-94727.RG |
| Satin Nickel | K-94727.SN |

## P-92837
Colorado Pull 128mm C/C

| | | | |
|---|---|---|---|
| CASE QTY | 100 | WEIGHT/CASE | 35.15 lbs |
| BOX QTY | 10 | PROJECTION | 30mm |
| LENGTH | 150mm | WIDTH | 16mm |

| Available Colors | Item Number |
|---|---|
| Oil Rubbed Bronze | P-92837.10B |
| Matte Black | P-92837.BK |
| Dark Pewter | P-92837.DP |
| Polished Chrome | P-92837.PC |
| Rose Gold | P-92837.RG |
| Satin Nickel | P-92837.SN |

## P-92836
Colorado Pull 96mm C/C

| | | | |
|---|---|---|---|
| CASE QTY | 150 | WEIGHT/CASE | 45.9 lbs |
| BOX QTY | 15 | PROJECTION | 30mm |
| LENGTH | 118mm | WIDTH | 16mm |

| Available Colors | Item Number |
|---|---|
| Oil Rubbed Bronze | P-92836.10B |
| Matte Black | P-92836.BK |
| Dark Pewter | P-92836.DP |
| Polished Chrome | P-92836.PC |
| Rose Gold | P-92836.RG |
| Satin Nickel | P-92836.SN |

## P-92838
Colorado Pull 160mm C/C

| | | | |
|---|---|---|---|
| CASE QTY | 100 | WEIGHT/CASE | 40.55 lbs |
| BOX QTY | 10 | PROJECTION | 30mm |
| LENGTH | 182mm | WIDTH | 16mm |

| Available Colors | Item Number |
|---|---|
| Oil Rubbed Bronze | P-92838.10B |
| Matte Black | P-92838.BK |
| Dark Pewter | P-92838.DP |
| Polished Chrome | P-92838.PC |
| Rose Gold | P-92838.RG |
| Satin Nickel | P-92838.SN |

# PRIDE DÉCOR® St. Louis Collection

K-91090

## K-91090
St. Louis Knob 33.6x25mm

| | | | |
|---|---|---|---|
| CASE QTY | 250 | WEIGHT/CASE | 54 lbs |
| BOX QTY | 25 | PROJECTION | 29mm |
| LENGTH | 33.6mm | WIDTH | 33.6mm |

| Available Colors | Item Number |
|---|---|
| Oil Rubbed Bronze | K-91090.10B |
| Rose Gold | K-91090.RG |
| Satin Nickel | K-91090.SN |

K-81361

## K-81361
Mushroom Knob 31mm

| | | | |
|---|---|---|---|
| CASE QTY | 250 | WEIGHT/CASE | 22 lbs |
| BOX QTY | 25 | PROJECTION | 28mm |
| DIAMETER | 31mm | | |

| Available Colors | Item Number |
|---|---|
| Oil Rubbed Bronze | K-81361.10B |
| Matte Black | K-81361.BK |
| Polished Chrome | K-81361.PC |
| Rose Gold | K-81361.RG |
| Satin Nickel | K-81361.SN |

## P-91496
St. Louis Arch Pull 96mm C/C

| | | | |
|---|---|---|---|
| CASE QTY | 250 | WEIGHT/CASE | 51 lbs |
| BOX QTY | 25 | PROJECTION | 26mm |
| LENGTH | 133mm | WIDTH | 23mm |

| Available Colors | Item Number |
|---|---|
| Oil Rubbed Bronze | P-91496.10B |
| Satin Nickel | P-91496.SN |

## P-91497
St. Louis Arch Pull 128mm C/C

| | | | |
|---|---|---|---|
| CASE QTY | 100 | WEIGHT/CASE | 25 lbs |
| BOX QTY | 25 | PROJECTION | 26mm |
| LENGTH | 165mm | WIDTH | 25mm |

| Available Colors | Item Number |
|---|---|
| Oil Rubbed Bronze | P-91497.10B |
| Satin Nickel | P-91497.SN |

## P-91498
St. Louis Arch Pull 160mm C/C 195mm OL

| | | | |
|---|---|---|---|
| CASE QTY | 100 | WEIGHT/CASE | 29 lbs |
| BOX QTY | 25 | PROJECTION | 26mm |
| LENGTH | 195mm | WIDTH | 26mm |

| Available Colors | Item Number |
|---|---|
| Oil Rubbed Bronze | P-91498.10B |
| Satin Nickel | P-91498.SN |



# PRIDE DÉCOR® Washington Collection

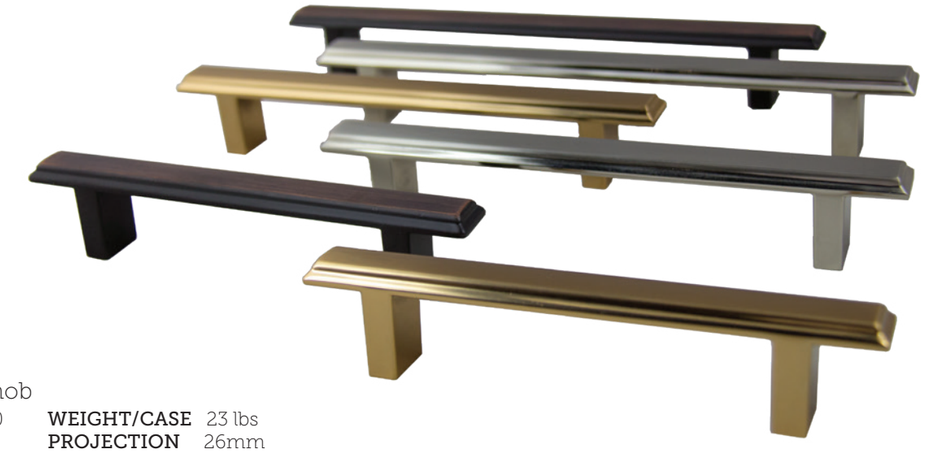

## K-92230
28mm Square Knob

| | | | |
|---|---|---|---|
| CASE QTY | 250 | WEIGHT/CASE | 23 lbs |
| BOX QTY | 25 | PROJECTION | 26mm |
| LENGTH | 28mm | WIDTH | 28mm |

| Available Colors | Item Number |
|---|---|
| Oil Rubbed Bronze | K-92230.10B |
| Matte Black | K-92230.BK |
| Dark Pewter | K-92230.DP |
| Polished Chrome | K-92230.PC |
| Rose Gold | K-92230.RG |
| Satin Nickel | K-92230.SN |

K-92430

K-92230

## K-92430
36x28 Rectangular Knob

| | | | |
|---|---|---|---|
| CASE QTY | 250 | WEIGHT/CASE | 33.5 lbs |
| BOX QTY | 25 | PROJECTION | 26mm |
| LENGTH | 36mm | WIDTH | 28mm |

| Available Colors | Item Number |
|---|---|
| Oil Rubbed Bronze | K-92430.10B |
| Matte Black | K-92430.BK |
| Dark Pewter | K-92430.DP |
| Polished Chrome | K-92430.PC |
| Rose Gold | K-92430.RG |
| Satin Nickel | K-92430.SN |

## P-91297
Washington Pull 128mm C/C 168mm OL

| | | | |
|---|---|---|---|
| CASE QTY | 100 | WEIGHT/CASE | 30.5 lbs |
| BOX QTY | 25 | PROJECTION | 28mm |
| LENGTH | 168mm | WIDTH | 16mm |

| Available Colors | Item Number |
|---|---|
| Oil Rubbed Bronze | P-91297.10B |
| Rose Gold | P-91297.RG |
| Satin Nickel | P-91297.SN |

## P-91296
Washington Pull 96mm C/C 136mm OL

| | | | |
|---|---|---|---|
| CASE QTY | 250 | WEIGHT/CASE | 53.3 lbs |
| BOX QTY | 20 | PROJECTION | 28mm |
| LENGTH | 136mm | WIDTH | 16mm |

| Available Colors | Item Number |
|---|---|
| Oil Rubbed Bronze | P-91296.10B |
| Rose Gold | P-91296.RG |
| Satin Nickel | P-91296.SN |

## P-91298
Washington Pull 160mm C/C 200mm OL

| | | | |
|---|---|---|---|
| CASE QTY | 100 | WEIGHT/CASE | 33 lbs |
| BOX QTY | 25 | PROJECTION | 28mm |
| LENGTH | 200mm | WIDTH | 16mm |

| Available Colors | Item Number |
|---|---|
| Oil Rubbed Bronze | P-91298.10B |
| Rose Gold | P-91298.RG |
| Satin Nickel | P-91298.SN |

PRIDE DÉCOR®

# Miami Collection

## K-83125
1" Square Knob

| | | | |
|---|---|---|---|
| **CASE QTY** | 250 | **WEIGHT/CASE** | 32.9 lbs |
| **BOX QTY** | 25 | **PROJECTION** | 23mm |
| **LENGTH** | 1" | **WIDTH** | 1" |

| Available Colors | Item Number |
|---|---|
| Oil Rubbed Bronze | K-83125.10B |
| Matte Black | K-83125.BK |
| Dark Pewter | K-83125.DP |
| Polished Chrome | K-83125.PC |
| Rose Gold | K-83125.RG |
| Satin Nickel | K-83125.SN |

## P-81572
Miami Pull 128mm C/C

| | | | |
|---|---|---|---|
| **CASE QTY** | 250 | **WEIGHT/CASE** | 56 lbs |
| **BOX QTY** | 25 | **PROJECTION** | 27mm |
| **LENGTH** | 149mm | **WIDTH** | 8.5mm |

| Available Colors | Item Number |
|---|---|
| Matte Black | P-81572.BK |
| Dark Pewter | P-81572.DP |
| Polished Chrome | P-81572.PC |
| Rose Gold | P-81572.RG |
| Satin Nickel | P-81572.SN |

## P-80572
Miami Pull 96mm C/C

| | | | |
|---|---|---|---|
| **CASE QTY** | 250 | **WEIGHT/CASE** | 52 lbs |
| **BOX QTY** | 25 | **PROJECTION** | 27mm |
| **LENGTH** | 120mm | **WIDTH** | 8.2mm |

| Available Colors | Item Number |
|---|---|
| Oil Rubbed Bronze | P-80572.10B |
| Matte Black | P-80572.BK |
| Dark Pewter | P-80572.DP |
| Polished Chrome | P-80572.PC |
| Rose Gold | P-80572.RG |
| Satin Nickel | P-80572.SN |

## P-83572
Miami Pull 160mm C/C

| | | | |
|---|---|---|---|
| **CASE QTY** | 100 | **WEIGHT/CASE** | 30.5 lbs |
| **BOX QTY** | 25 | **PROJECTION** | 27mm |
| **LENGTH** | 190mm | **WIDTH** | 9mm |

| Available Colors | Item Number |
|---|---|
| Matte Black | P-83572.BK |
| Dark Pewter | P-83572.DP |
| Polished Chrome | P-83572.PC |
| Rose Gold | P-83572.RG |
| Satin Nickel | P-83572.SN |

PRIDE DÉCOR®

# Square Pull Collection

ADA FRIENDLY ✓

## P-87226 ✓
Square Pull 96mm C/C

| | | | |
|---|---|---|---|
| CASE QTY | 250 | WEIGHT/CASE | 60.5 lbs |
| BOX QTY | 25 | PROJECTION | 35mm |
| LENGTH | 105.8mm | WIDTH | 9.8mm |

| Available Colors | Item Number |
|---|---|
| Oil Rubbed Bronze | P-87226.10B |
| Matte Black | P-87226.BK |
| Dark Pewter | P-87226.DP |
| Polished Chrome | P-87226.PC |
| Rose Gold | P-87226.RG |
| Satin Nickel | P-87226.SN |

## P-87227 ✓
Square Pull 128mm C/C

| | | | |
|---|---|---|---|
| CASE QTY | 200 | WEIGHT/CASE | 56 lbs |
| BOX QTY | 20 | PROJECTION | 35mm |
| LENGTH | 137mm | WIDTH | 9.8mm |

| Available Colors | Item Number |
|---|---|
| Oil Rubbed Bronze | P-87227.10B |
| Matte Black | P-87227.BK |
| Dark Pewter | P-87227.DP |
| Polished Chrome | P-87227.PC |
| Rose Gold | P-87227.RG |
| Satin Brass | P-87227.SB |
| Satin Nickel | P-87227.SN |

## P-87228 ✓
Square Pull 160mm C/C

| | | | |
|---|---|---|---|
| CASE QTY | 100 | WEIGHT/CASE | 32.8 lbs |
| BOX QTY | 25 | PROJECTION | 35mm |
| LENGTH | 169.5mm | WIDTH | 9.8mm |

| Available Colors | Item Number |
|---|---|
| Oil Rubbed Bronze | P-87228.10B |
| Matte Black | P-87228.BK |
| Dark Pewter | P-87228.DP |
| Polished Chrome | P-87228.PC |
| Rose Gold | P-87228.RG |
| Satin Nickel | P-87228.SN |

## P-87229 ✓
Square Pull 192mm C/C

| | | | |
|---|---|---|---|
| CASE QTY | 100 | WEIGHT/CASE | 37 lbs |
| BOX QTY | 25 | PROJECTION | 35mm |
| LENGTH | 201.5mm | WIDTH | 9.8mm |

| Available Colors | Item Number |
|---|---|
| Oil Rubbed Bronze | P-87229.10B |
| Matte Black | P-87229.BK |
| Dark Pewter | P-87229.DP |
| Polished Chrome | P-87229.PC |
| Rose Gold | P-87229.RG |
| Satin Nickel | P-87229.SN |

## P-87300 ✓
Square Pull 224mm C/C

| | | | |
|---|---|---|---|
| CASE QTY | 50 | WEIGHT/CASE | 20 lbs |
| BOX QTY | 10 | PROJECTION | 35mm |
| LENGTH | 232.8mm | WIDTH | 9.8mm |

| Available Colors | Item Number |
|---|---|
| Oil Rubbed Bronze | P-87300.10B |
| Matte Black | P-87300.BK |
| Satin Nickel | P-87300.SN |

## P-87140.SN ✓
Square Pull 280mm C/C Satin Nickel

| | | | |
|---|---|---|---|
| CASE QTY | 100 | WEIGHT/CASE | 42 lbs |
| BOX QTY | 25 | PROJECTION | 28mm |
| LENGTH | 289mm | WIDTH | 9.8mm |

## P-87328.SN ✓
Square Pull 320mm C/C Satin Nickel

| | | | |
|---|---|---|---|
| CASE QTY | 100 | WEIGHT/CASE | 43 lbs |
| BOX QTY | 10 | PROJECTION | 28mm |
| LENGTH | 329.5mm | WIDTH | 9.8mm |

# Pride Décor® Vail Collection

ADA FRIENDLY ✓

## K-1218
32mm Round Flat Top

| | | | |
|---|---|---|---|
| CASE QTY | 250 | WEIGHT/CASE | 44 lbs |
| BOX QTY | 25 | PROJECTION | 30mm |
| DIAMETER | 32mm | | |

| Available Colors | Item Number |
|---|---|
| Oil Rubbed Bronze | K-1218.10B |
| Matte Black | K-1218.BK |
| Dark Pewter | K-1218.DP |
| Polished Chrome | K-1218.PC |
| Rose Gold | K-1218.RG |
| Satin Nickel | K-1218.SN |

## P-86373 ✓
Vail Pull 96mm C/C

| | | | |
|---|---|---|---|
| CASE QTY | 250 | WEIGHT/CASE | 46 lbs |
| BOX QTY | 25 | PROJECTION | 30mm |
| LENGTH | 115mm | WIDTH | 12mm |

| Available Colors | Item Number |
|---|---|
| Oil Rubbed Bronze | P-86373.10B |
| Matte Black | P-86373.BK |
| Dark Pewter | P-86373.DP |
| Polished Chrome | P-86373.PC |
| Rose Gold | P-86373.RG |
| Satin Nickel | P-86373.SN |

## P-86374 ✓
Vail Pull 128mm C/C

| | | | |
|---|---|---|---|
| CASE QTY | 150 | WEIGHT/CASE | 41 lbs |
| BOX QTY | 25 | PROJECTION | 30mm |
| LENGTH | 149mm | WIDTH | 12mm |

| Available Colors | Item Number |
|---|---|
| Oil Rubbed Bronze | P-86374.10B |
| Matte Black | P-86374.BK |
| Dark Pewter | P-86374.DP |
| Polished Chrome | P-86374.PC |
| Rose Gold | P-86374.RG |
| Satin Nickel | P-86374.SN |

## P-86375 ✓
Vail Pull 160mm C/C

| | | | |
|---|---|---|---|
| CASE QTY | 100 | WEIGHT/CASE | 32.3 lbs |
| BOX QTY | 10 | PROJECTION | 30mm |
| LENGTH | 180mm | WIDTH | 12mm |

| Available Colors | Item Number |
|---|---|
| Oil Rubbed Bronze | P-86375.10B |
| Matte Black | P-86375.BK |
| Dark Pewter | P-86375.DP |
| Polished Chrome | P-86375.PC |
| Rose Gold | P-86375.RG |
| Satin Nickel | P-86375.SN |



# Pride Décor® Charlotte Collection

ADA FRIENDLY ✓

## K-81091
32mm Square Knob

| | | | |
|---|---|---|---|
| CASE QTY | 250 | WEIGHT/CASE | 36.5 lbs |
| BOX QTY | 25 | PROJECTION | 26mm |
| LENGTH | 32mm | WIDTH | 32mm |

| Available Colors | Item Number |
|---|---|
| Oil Rubbed Bronze | K-81091.10B |
| Antique Satin Brass | K-81091.ABSB |
| Satin Pewter | K-81091.APH |
| Matte Black | K-81091.BK |
| Weathered Black | K-81091.DACM |
| Polished Chrome | K-81091.PC |
| Rose Gold | K-81091.RG |
| Satin Nickel | K-81091.SN |

## P-81092 ✓
Charlotte Deco Pull 96mm C/C

| | | | |
|---|---|---|---|
| CASE QTY | 250 | WEIGHT/CASE | 46.9 lbs |
| BOX QTY | 25 | PROJECTION | 28mm |
| LENGTH | 118mm | WIDTH | 16mm |

| Available Colors | Item Number |
|---|---|
| Oil Rubbed Bronze | P-81092.10B |
| Antique Satin Brass | P-81092.ABSB |
| Satin Pewter | P-81092.APH |
| Matte Black | P-81092.BK |
| Weathered Black | P-81092.DACM |
| Polished Chrome | P-81092.PC |
| Rose Gold | P-81092.RG |
| Satin Nickel | P-81092.SN |

## P-82092 ✓
Charlotte Deco Pull 128mm C/C

| | | | |
|---|---|---|---|
| CASE QTY | 250 | WEIGHT/CASE | 52.53 lbs |
| BOX QTY | 25 | PROJECTION | 28mm |
| LENGTH | 142mm | WIDTH | 16mm |

| Available Colors | Item Number |
|---|---|
| Oil Rubbed Bronze | P-82092.10B |
| Matte Black | P-82092.BK |
| Polished Chrome | P-82092.PC |
| Rose Gold | P-82092.RG |
| Satin Nickel | P-82092.SN |

## P-83092 ✓
Charlotte Deco Pull 160mm C/C

| | | | |
|---|---|---|---|
| CASE QTY | 200 | WEIGHT/CASE | 49.8 lbs |
| BOX QTY | 20 | PROJECTION | 28mm |
| LENGTH | 172mm | WIDTH | 16mm |

| Available Colors | Item Number |
|---|---|
| Oil Rubbed Bronze | P-83092.10B |
| Matte Black | P-83092.BK |
| Polished Chrome | P-83092.PC |
| Rose Gold | P-83092.RG |
| Satin Nickel | P-83092.SN |

PRIDE DÉCOR®

# Bar Pull Collection

## K-102
Bar Pull Knob 2" OL x 12mm Dia.

| | | | |
|---|---|---|---|
| **CASE QTY** | 250 | **WEIGHT/CASE** | 36 lbs |
| **BOX QTY** | 25 | **PROJECTION** | 35mm |
| **LENGTH** | 2" | **WIDTH** | 12mm |

| Available Colors | Item Number |
|---|---|
| Oil Rubbed Bronze | K-102.10B |
| Matte Black | K-102.BK |
| Polished Chrome | K-102.PC |
| Rose Gold | K-102.RG |
| Satin Nickel | K-102.SN |

## P-104
Bar Pull 115mm OL x 64mm C/C x 12mm Dia.

| | | | |
|---|---|---|---|
| **CASE QTY** | 100 | **WEIGHT/CASE** | 29.70 lbs |
| **BOX QTY** | 25 | **PROJECTION** | 35mm |
| **LENGTH** | 4 17/32" | **WIDTH** | 12mm |

| Available Colors | Item Number |
|---|---|
| Matte Black | P-104.BK |
| Polished Chrome | P-104.PC |
| Rose Gold | P-104.RG |
| Satin Nickel | P-104.SN |

## P-106
Bar Pull 6" OL x 3" C/C x 12mm Dia.

| | | | |
|---|---|---|---|
| **CASE QTY** | 100 | **WEIGHT/CASE** | 39.5 lbs |
| **BOX QTY** | 10 | **PROJECTION** | 35mm |
| **LENGTH** | 6" | **WIDTH** | 12mm |

| Available Colors | Item Number |
|---|---|
| Oil Rubbed Bronze | P-106.10B |
| Matte Black | P-106.BK |
| Dark Pewter | P-106.DP |
| Polished Chrome | P-106.PC |
| Rose Gold | P-106.RG |
| Satin Nickel | P-106.SN |

## P-1096
Bar Pull 6" OL x 96mm C/C x 12mm Dia.

| | | | |
|---|---|---|---|
| **CASE QTY** | 100 | **WEIGHT/CASE** | 36 lbs |
| **BOX QTY** | 10 | **PROJECTION** | 35mm |
| **LENGTH** | 6" | **WIDTH** | 12mm |

| Available Colors | Item Number |
|---|---|
| Oil Rubbed Bronze | P-1096.10B |
| Matte Black | P-1096.BK |
| Dark Pewter | P-1096.DP |
| Polished Chrome | P-1096.PC |
| Rose Gold | P-1096.RG |
| Polished Brass | P-1096.PB |
| Satin Brass | P-1096.SB |
| Satin Nickel | P-1096.SN |
| Stainless Steel | P-1096.SS |



## P-107.SN SATIN NICKEL
Bar Pull 7" OL x 128mm C/C x 12mm Dia.

| | | | |
|---|---|---|---|
| **CASE QTY** | 100 | **WEIGHT/CASE** | 40 lbs |
| **BOX QTY** | 10 | **PROJECTION** | 35mm |
| **LENGTH** | 7" | **WIDTH** | 12mm |

## P-108
Bar Pull 8" OL x 5" C/C x 12mm Dia.

| | | | |
|---|---|---|---|
| **CASE QTY** | 50 | **WEIGHT/CASE** | 51 lbs |
| **BOX QTY** | 10 | **PROJECTION** | 35mm |
| **LENGTH** | 8" | **WIDTH** | 12mm |

| Available Colors | Item Number | |
|---|---|---|
| Oil Rubbed Bronze | P-108.10B | |
| Matte Black | P-108.BK | *100 Case |
| Dark Pewter | P-108.DP | |
| Polished Chrome | P-108.PC | *100 Case |
| Rose Gold | P-108.RG | |
| Satin Nickel | P-108.SN | *100 Case |

## P-109.SN SATIN NICKEL
Bar Pull 9" OL x 160mm C/C x 12mm Dia

| | | | |
|---|---|---|---|
| **CASE QTY** | 100 | **WEIGHT/CASE** | 50 lbs |
| **BOX QTY** | 10 | **PROJECTION** | 35mm |
| **LENGTH** | 9" | **WIDTH** | 12mm |

## P-110
Bar Pull 10" OL x 7" C/C x 12mm Dia.

| | | | |
|---|---|---|---|
| **CASE QTY** | 100 | **WEIGHT/CASE** | 55.5 lbs |
| **BOX QTY** | 10 | **PROJECTION** | 35mm |
| **LENGTH** | 10" | **WIDTH** | 12mm |

| Available Colors | Item Number | |
|---|---|---|
| Oil Rubbed Bronze | P-110.10B | *50 Case |
| Matte Black | P-110.BK | |
| Dark Pewter | P-110.DP | *50 Case |
| Polished Chrome | P-110.PC | |
| Rose Gold | P-110.RG | *50 Case |
| Satin Nickel | P-110.SN | |

## P-112
Bar Pull 12" OL x 9" C/C x 12mm Dia.

| | | | |
|---|---|---|---|
| **CASE QTY** | 50 | **WEIGHT/CASE** | 36 lbs |
| **BOX QTY** | 10 | **PROJECTION** | 35mm |
| **LENGTH** | 12" | **WIDTH** | 12mm |

| Available Colors | Item Number |
|---|---|
| Oil Rubbed Bronze | P-112.10B |
| Matte Black | P-112.BK |
| Polished Chrome | P-112.PC |
| Rose Gold | P-112.RG |
| Satin Nickel | P-112.SN |

PRIDE DÉCOR®

# Bar Pull Collection

## P-114
Bar Pull 14" OL x 11" C/C x 12mm Dia.

| | | | |
|---|---|---|---|
| **CASE QTY** | 50 | **WEIGHT/CASE** | 37.5 lbs |
| **BOX QTY** | 10 | **PROJECTION** | 35mm |
| **LENGTH** | 14" | **WIDTH** | 12mm |

| Available Colors | Item Number |
|---|---|
| Matte Black | P-114.BK |
| Rose Gold | P-114.RG |
| Satin Nickel | P-114.SN |

## P-116
Bar Pull 16" OL x 13" C/C x 12mm Dia.

| | | | |
|---|---|---|---|
| **CASE QTY** | 50 | **WEIGHT/CASE** | 43 lbs |
| **BOX QTY** | 10 | **PROJECTION** | 35mm |
| **LENGTH** | 16" | **WIDTH** | 12mm |

| Available Colors | Item Number |
|---|---|
| Matte Black | P-116.BK |
| Oil Rubbed Bronze | P-116.10B |
| Rose Gold | P-116.RG |
| Satin Nickel | P-116.SN |

## P-118.SN SATIN NICKEL
Bar Pull 18" OL x 15" C/C x 12mm Dia.

| | | | |
|---|---|---|---|
| **CASE QTY** | 50 | **WEIGHT/CASE** | 66 lbs |
| **BOX QTY** | 10 | **PROJECTION** | 35mm |
| **LENGTH** | 18" | **WIDTH** | 12mm |

| Available Colors | Item Number |
|---|---|
| Matte Black | P-118.BK |

## P-120
Bar Pull 20" OL x 17" C/C x 12mm Dia.

| | | | |
|---|---|---|---|
| **CASE QTY** | 40 | **WEIGHT/CASE** | 57 lbs |
| **BOX QTY** | 10 | **PROJECTION** | 35mm |
| **LENGTH** | 20" | **WIDTH** | 12mm |

| Available Colors | Item Number |
|---|---|
| Matte Black | P-120.BK |
| Oil Rubbed Bronze | P-120.10B |
| Satin Nickel | P-120.SN |

## P-122
Bar Pull 22" OL x 19" C/C x 12mm Dia.

| | | | |
|---|---|---|---|
| **CASE QTY** | 40 | **WEIGHT/CASE** | 61 lbs |
| **BOX QTY** | 10 | **PROJECTION** | 35mm |
| **LENGTH** | 22" | **WIDTH** | 12mm |

| Available Colors | Item Number |
|---|---|
| Matte Black | P-122.BK |
| Satin Nickel | P-122.SN |

## P-124
Bar Pull 24" OL x 21" C/C x 12mm Dia.

| | | | |
|---|---|---|---|
| **CASE QTY** | 40 | **WEIGHT/CASE** | 67 lbs |
| **BOX QTY** | 10 | **PROJECTION** | 35mm |
| **LENGTH** | 24" | **WIDTH** | 12mm |

| Available Colors | Item Number |
|---|---|
| Oil Rubbed Bronze | P-124.10B |
| Satin Nickel | P-124.SN |

## P-126.SN SATIN NICKEL
Bar Pull 26" OL x 23" C/C x 12mm Dia.

| | | | |
|---|---|---|---|
| **CASE QTY** | 40 | **WEIGHT/CASE** | 73 lbs |
| **BOX QTY** | 10 | **PROJECTION** | 35mm |
| **LENGTH** | 26" | **WIDTH** | 12mm |

## P-128
Bar Pull 28" OL x 25" C/C x 12mm Dia.

| | | | |
|---|---|---|---|
| **CASE QTY** | 20 | **WEIGHT/CASE** | 39 lbs |
| **BOX QTY** | 10 | **PROJECTION** | 35mm |
| **LENGTH** | 28" | **WIDTH** | 12mm |

| Available Colors | Item Number |
|---|---|
| Satin Nickel | P-128.SN |

## P-130.SN SATIN NICKEL
Bar Pull 30" OL x 27" C/C x 12mm Dia.

| | | | |
|---|---|---|---|
| **CASE QTY** | 20 | **WEIGHT/CASE** | 41 lbs |
| **BOX QTY** | 10 | **PROJECTION** | 35mm |
| **LENGTH** | 30" | **WIDTH** | 12mm |

PRIDE DÉCOR®

# Bar Pull-Stainless Steel

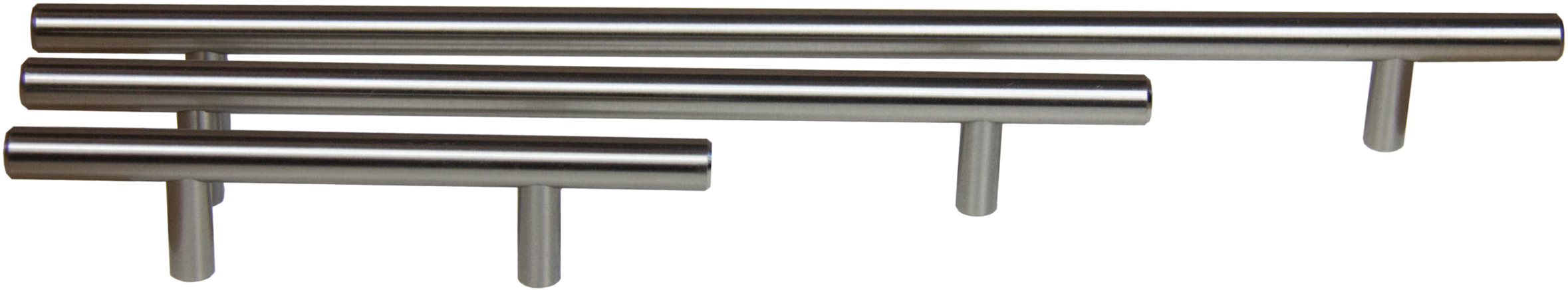

**K-102.SS** STAINLESS STEEL
Bar Pull Knob 2-3/8" OL x 12mm Dia.

| | | | |
|---|---|---|---|
| CASE QTY | 250 | WEIGHT/CASE | 36 lbs |
| BOX QTY | 25 | PROJECTION | 35mm |
| LENGTH | 2-3/8" | WIDTH | 12mm |

**P-105.SS** STAINLESS STEEL
Bar Pull 5-1/2" OL x 3" C/C x 12mm Dia.

| | | | |
|---|---|---|---|
| CASE QTY | 100 | WEIGHT/CASE | 37 lbs |
| BOX QTY | 10 | PROJECTION | 35mm |
| LENGTH | 5-1/2" | WIDTH | 12mm |

**P-1096.SS** STAINLESS STEEL
Bar Pull 6" OL x 96mm C/C x 12mm Dia.

| | | | |
|---|---|---|---|
| CASE QTY | 100 | WEIGHT/CASE | 39 lbs |
| BOX QTY | 10 | PROJECTION | 35mm |
| LENGTH | 6" | WIDTH | 12mm |

**P-1096H.BK** HOLLOW STAINLESS STEEL MATTE BLACK
Bar Pull 6" OL x 96mm C/C x 12mm Dia.

| | | | |
|---|---|---|---|
| CASE QTY | 200 | WEIGHT/CASE | 21 lbs |
| BOX QTY | 20 | PROJECTION | 35mm |
| LENGTH | 6" | WIDTH | 12mm |

**P-1096H.SS** HOLLOW STAINLESS STEEL
Bar Pull 6" OL x 96mm C/C x 12mm Dia.

| | | | |
|---|---|---|---|
| CASE QTY | 200 | WEIGHT/CASE | 22.88 lbs |
| BOX QTY | 20 | PROJECTION | 35mm |
| LENGTH | 6" | WIDTH | 12mm |

**P-1068H.SS** HOLLOW STAINLESS STEEL
Bar Pull 174mm OL x 128mm C/C x 12mm Dia.

| | | | |
|---|---|---|---|
| CASE QTY | 200 | WEIGHT/CASE | 26 lbs |
| BOX QTY | 20 | PROJECTION | 35mm |
| LENGTH | 174mm | WIDTH | 12mm |

**P-107.SS** STAINLESS STEEL
Bar Pull 7-7/16" OL x 128mm C/C x 12mm Dia.

| | | | |
|---|---|---|---|
| CASE QTY | 100 | WEIGHT/CASE | 46 lbs |
| BOX QTY | 10 | PROJECTION | 35mm |
| LENGTH | 7-7/16" | WIDTH | 12mm |

**P-108H.SS** HOLLOW STAINLESS STEEL
Bar Pull 8" OL x 128mm C/C x 12mm Dia.

| | | | |
|---|---|---|---|
| CASE QTY | 200 | WEIGHT/CASE | 27 lbs |
| BOX QTY | 20 | PROJECTION | 35mm |
| LENGTH | 8" | WIDTH | 12mm |



**P-109.SS** STAINLESS STEEL
Bar Pull 9-7/8" OL x 192mm C/C x 12mm Dia.

| | | | |
|---|---|---|---|
| CASE QTY | 100 | WEIGHT/CASE | 57 lbs |
| BOX QTY | 10 | PROJECTION | 35mm |
| LENGTH | 9-7/8" | WIDTH | 12mm |

**P-113.SS** STAINLESS STEEL
Bar Pull 13-1/4" OL x 256mm C/C x 12mm Dia.

| | | | |
|---|---|---|---|
| CASE QTY | 50 | WEIGHT/CASE | 61 lbs |
| BOX QTY | 10 | PROJECTION | 35mm |
| LENGTH | 13-1/4" | WIDTH | 12mm |

**P-115.SS** STAINLESS STEEL
Bar Pull 15-3/4" OL x 320mm C/C x 12mm Dia.

| | | | |
|---|---|---|---|
| CASE QTY | 50 | WEIGHT/CASE | 51 lbs |
| BOX QTY | 10 | PROJECTION | 35mm |
| LENGTH | 15-3/4" | WIDTH | 12mm |

**P-119.SS** STAINLESS STEEL
Bar Pull 19-1/2" OL x 416mm C/C x 12mm Dia

| | | | |
|---|---|---|---|
| CASE QTY | 50 | WEIGHT/CASE | 66 lbs |
| BOX QTY | 10 | PROJECTION | 35mm |
| LENGTH | 19-1/2" | WIDTH | 12mm |

**P-122.SS** STAINLESS STEEL
Bar Pull 22" OL x 19" C/C x 12mm Dia.

| | | | |
|---|---|---|---|
| CASE QTY | 40 | WEIGHT/CASE | 61 lbs |
| BOX QTY | 10 | PROJECTION | 35mm |
| LENGTH | 22" | WIDTH | 12mm |

**P-124.SS** STAINLESS STEEL
Bar Pull 24" OL x 21" C/C x 12mm Dia.

| | | | |
|---|---|---|---|
| CASE QTY | 25 | WEIGHT/CASE | 67 lbs |
| BOX QTY | 10 | PROJECTION | 35mm |
| LENGTH | 24" | WIDTH | 12mm |

**P-128.SS** STAINLESS STEEL
Bar Pull 28" OL x 25" C/C x 12mm Dia.

| | | | |
|---|---|---|---|
| CASE QTY | 25 | WEIGHT/CASE | 34 lbs |
| BOX QTY | 10 | PROJECTION | 35mm |
| LENGTH | 28" | WIDTH | 12mm |

**P-133.SS** STAINLESS STEEL
Bar Pull 33-1/4" OL x 768mm C/C x 12mm Dia.

| | | | |
|---|---|---|---|
| CASE QTY | 20 | WEIGHT/CASE | 48 lbs |
| BOX QTY | 10 | PROJECTION | 35mm |
| LENGTH | 33-1/4" | WIDTH | 12mm |

# Bar Pull Unique Options

**P-81837.DN**
Curved Bar Pull 128mm C/C Dull Nickel

| | | | |
|---|---|---|---|
| **CASE QTY** | 250 | **WEIGHT/CASE** | 56 lbs |
| **BOX QTY** | 25 | **PROJECTION** | 26mm |
| **LENGTH** | 165mm | **WIDTH** | 10mm |

**P-0136**
Bar Pull 136mm OL x 3" C/C x 12mm Dia
H=35mm

| | | | |
|---|---|---|---|
| **CASE QTY** | 100 | **WEIGHT/CASE** | 33.5 lbs |
| **BOX QTY** | 10 | **PROJECTION** | 35mm |
| **LENGTH** | 136mm | **WIDTH** | 12mm |

| Available Colors | Item Number |
|---|---|
| Matte Black | P-0136.BK |
| Satin Nickel | P-0136.SN |
| Polished Chrome | P-0136.PC |

**P-0146**
Bar Pull 96mm C/C 146mm OL 14mm dia

| | | | |
|---|---|---|---|
| **CASE QTY** | 100 | **WEIGHT/CASE** | 46 lbs |
| **BOX QTY** | 10 | **PROJECTION** | 35mm |
| **LENGTH** | 146mm | **WIDTH** | 14mm |

| Available Colors | Item Number |
|---|---|
| Matte Black | P-0146.BK |
| Satin Nickel | P-0146.SN |

**P-0178**
Bar Pull 128mm 178mm OL 14mm Dia

| | | | |
|---|---|---|---|
| **CASE QTY** | 100 | **WEIGHT/CASE** | 54 lbs |
| **BOX QTY** | 10 | **PROJECTION** | 35mm |
| **LENGTH** | 178mm | **WIDTH** | 14mm |

| Available Colors | Item Number |
|---|---|
| Matte Black | P-0178.BK |
| Satin Nickel | P-0178.SN |

**P-242.SN**
Bar Pull 192mm C/C 242mm OL 14mm Dia
H=36.5mm Satin Nickel

| | | | |
|---|---|---|---|
| **CASE QTY** | 50 | **WEIGHT/CASE** | 36 lbs |
| **BOX QTY** | 10 | **PROJECTION** | 36.5mm |
| **LENGTH** | 242mm | **WIDTH** | 14mm |

**P-370.SN**
Bar Pull 320mm C/C 370mm OL 14mm Dia
H=36.5mm Satin Nickel

| | | | |
|---|---|---|---|
| **CASE QTY** | 50 | **WEIGHT/CASE** | 51 lbs |
| **BOX QTY** | 10 | **PROJECTION** | 36.5mm |
| **LENGTH** | 370mm | **WIDTH** | 14mm |



# Eleganza Collection

**P-72276.SN**
Bar Pull Square Leg 96mm C/C
136mm OL 14mm Dia

| | | | |
|---|---|---|---|
| **CASE QTY** | 100 | **WEIGHT/CASE** | 14 lbs |
| **BOX QTY** | 20 | **PROJECTION** | 33mm |
| **LENGTH** | 136mm | **WIDTH** | 14mm |

**P-72277.SN**
Bar Pull Square Leg 128mm C/C
6-5/8" OL Satin Nickel 14mm Dia

| | | | |
|---|---|---|---|
| **CASE QTY** | 100 | **WEIGHT/CASE** | 16 lbs |
| **BOX QTY** | 20 | **PROJECTION** | 33mm |
| **LENGTH** | 168mm | **WIDTH** | 14mm |

**P-72278.SN**
Bar Pull Square Leg 192mm C/C
9-1/8" OL Satin Nickel 14mm Dia

| | | | |
|---|---|---|---|
| **CASE QTY** | 100 | **WEIGHT/CASE** | 19 lbs |
| **BOX QTY** | 20 | **PROJECTION** | 33mm |
| **LENGTH** | 232mm | **WIDTH** | 14mm |

### P-81456
Pull 96mm C/C

| | | | |
|---|---|---|---|
| CASE QTY | 120 | WEIGHT/CASE | 35 lbs |
| BOX QTY | 20 | PROJECTION | 26mm |
| LENGTH | 105mm | WIDTH | 21mm |

| Available Colors | Item Number |
|---|---|
| Oil Rubbed Bronze | P-81456.10B |
| Matte Black | P-81456.BK |
| Polished Chrome | P-81456.PC |
| Rose Gold | P-81456.RG |
| Satin Nickel | P-81456.SN |

### P-81458
Pull 128mm C/C

| | | | |
|---|---|---|---|
| CASE QTY | 100 | WEIGHT/CASE | 41.27 lbs |
| BOX QTY | 25 | PROJECTION | 30mm |
| LENGTH | 137mm | WIDTH | 21mm |

| Available Colors | Item Number |
|---|---|
| Oil Rubbed Bronze | P-81458.10B |
| Matte Black | P-81458.BK |
| Polished Chrome | P-81458.PC |
| Rose Gold | P-81458.RG |
| Satin Nickel | P-81458.SN |

ADA FRIENDLY

### P-21768
Pull 128mm C/C

| | | | |
|---|---|---|---|
| CASE QTY | 250 | WEIGHT/CASE | 53.8 lbs |
| BOX QTY | 25 | PROJECTION | 25mm |
| LENGTH | 145mm | WIDTH | 15mm |

| Available Colors | Item Number |
|---|---|
| Oil Rubbed Bronze | P-21768.10B |
| Polished Chrome | P-21768.PC |
| Rose Gold | P-21768.RG |
| Satin Nickel | P-21768.SN |

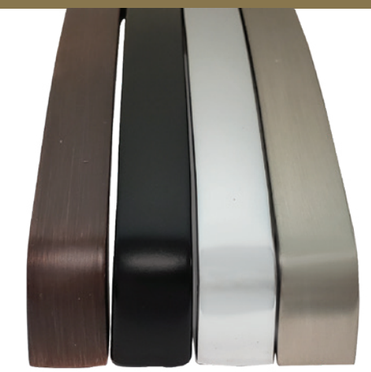

### P-82234
Modern Pull 96mm C/C

| | | | |
|---|---|---|---|
| CASE QTY | 200 | WEIGHT/CASE | 27 lbs |
| BOX QTY | 20 | PROJECTION | 24mm |
| LENGTH | 106mm | WIDTH | 10.6mm |

| Available Colors | Item Number |
|---|---|
| Oil Rubbed Bronze | P-82234.10B |
| Matte Black | P-82234.BK |
| Polished Chrome | P-82234.PC |
| Satin Nickel | P-82234.SN |

### P-82034
Modern Pull 128mm C/C

| | | | |
|---|---|---|---|
| CASE QTY | 250 | WEIGHT/CASE | 28 lbs |
| BOX QTY | 25 | PROJECTION | 24mm |
| LENGTH | 138mm | WIDTH | 10.6mm |

| Available Colors | Item Number |
|---|---|
| Oil Rubbed Bronze | P-82034.10B |
| Matte Black | P-82034.BK |
| Polished Chrome | P-82034.PC |
| Satin Nickel | P-82034.SN |

### P-81235
Modern Pull 160mm C/C

| | | | |
|---|---|---|---|
| CASE QTY | 250 | WEIGHT/CASE | 46 lbs |
| BOX QTY | 25 | PROJECTION | 25mm |
| LENGTH | 170mm | WIDTH | 13.5mm |

| Available Colors | Item Number |
|---|---|
| Oil Rubbed Bronze | P-81235.10B |
| Matte Black | P-81235.BK |
| Polished Chrome | P-81235.PC |
| Satin Nickel | P-81235.SN |

### P-82103
Modern Bow Pull 96mm C/C

| | | | |
|---|---|---|---|
| CASE QTY | 250 | WEIGHT/CASE | 32 lbs |
| BOX QTY | 25 | PROJECTION | 22.5mm |
| LENGTH | 138mm | WIDTH | 15mm |

| Available Colors | Item Number |
|---|---|
| Oil Rubbed Bronze | P-82103.10B |
| Matte Black | P-82103.BK |
| Polished Chrome | P-82103.PC |
| Satin Nickel | P-82103.SN |

### P-82104
Modern Bow Pull 128mm C/C

| | | | |
|---|---|---|---|
| CASE QTY | 250 | WEIGHT/CASE | 36 lbs |
| BOX QTY | 25 | PROJECTION | 20.5mm |
| LENGTH | 173mm | WIDTH | 16mm |

| Available Colors | Item Number |
|---|---|
| Oil Rubbed Bronze | P-82104.10B |
| Matte Black | P-82104.BK |
| Polished Chrome | P-82104.PC |
| Satin Nickel | P-82104.SN |

### P-82106
Modern Bow Pull 160mm C/C

| | | | |
|---|---|---|---|
| CASE QTY | 150 | WEIGHT/CASE | 23 lbs |
| BOX QTY | 25 | PROJECTION | 22mm |
| LENGTH | 206mm | WIDTH | 16mm |

| Available Colors | Item Number |
|---|---|
| Satin Nickel | P-82106.SN |

# Modern Collections

**P-87216** ✓
Deco Pull 128mm

| | | | |
|---|---|---|---|
| CASE QTY | 250 | WEIGHT/CASE | 43 lbs |
| BOX QTY | 25 | PROJECTION | 32mm |
| LENGTH | 144mm | WIDTH | 13mm |

| Available Colors | Item Number |
|---|---|
| Oil Rubbed Bronze | P-87216.10B |
| Matte Black | P-87216.BK |
| Polished Chrome | P-87216.PC |
| Satin Nickel | P-87216.SN |

ADA FRIENDLY ✓

**P-87215** ✓
Deco Pull 96mm

| | | | |
|---|---|---|---|
| CASE QTY | 250 | WEIGHT/CASE | 41 lbs |
| BOX QTY | 25 | PROJECTION | 32mm |
| LENGTH | 110mm | WIDTH | 13mm |

| Available Colors | Item Number |
|---|---|
| Oil Rubbed Bronze | P-87215.10B |
| Matte Black | P-87215.BK |
| Polished Chrome | P-87215.PC |
| Satin Nickel | P-87215.SN |

**P-87218** ✓
Deco Pull 160mm

| | | | |
|---|---|---|---|
| CASE QTY | 100 | WEIGHT/CASE | 20 lbs |
| BOX QTY | 10 | PROJECTION | 35mm |
| LENGTH | 175mm | WIDTH | 13mm |

| Available Colors | Item Number |
|---|---|
| Oil Rubbed Bronze | P-87218.10B |
| Matte Black | P-87218.BK |
| Polished Chrome | P-87218.PC |
| Satin Nickel | P-87218.SN |

**P-81541**
Deco Bow Pull 96mm C/C

| | | | |
|---|---|---|---|
| CASE QTY | 250 | WEIGHT/CASE | 41 lbs |
| BOX QTY | 25 | PROJECTION | 27mm |
| LENGTH | 122mm | WIDTH | 24mm |

| Available Colors | Item Number |
|---|---|
| Oil Rubbed Bronze | P-81541.10B |
| Polished Chrome | P-81541.PC |
| Satin Nickel | P-81541.SN |

**P-81542**
Deco Bow Pull 128mm C/C

| | | | |
|---|---|---|---|
| CASE QTY | 250 | WEIGHT/CASE | 50 lbs |
| BOX QTY | 25 | PROJECTION | 23mm |
| LENGTH | 154mm | WIDTH | 13mm |
| | | FOOT WIDTH | 25mm |

| Available Colors | Item Number |
|---|---|
| Antique Satin Pewter | P-81542.APH |
| Satin Nickel | P-81542.SN |





# Arch Pulls Commercial

**P-29255.SS**
Stainless Steel Pull 128mm C/C with Flat Top Metric Screws

| | | | |
|---|---|---|---|
| CASE QTY | 200 | WEIGHT/CASE | 45 lbs |
| BOX QTY | 20 | PROJECTION | 29mm |
| LENGTH | 152mm | WIDTH | 10mm |

**P-50S**
Arch Pull 96mm C/C

| | | | |
|---|---|---|---|
| CASE QTY | 200 | WEIGHT/CASE | 26 lbs |
| BOX QTY | 20 | PROJECTION | 30mm |
| LENGTH | 117mm | WIDTH | 10mm |

| Available Colors | Item Number |
|---|---|
| Matte Black | P-50S.BK |
| Satin Nickel | P-50S.SN |

250 Case; 25 Box

**P-50-160**
Arch Pull 160mm C/C

| | | | |
|---|---|---|---|
| CASE QTY | 150 | WEIGHT/CASE | 37 lbs |
| BOX QTY | 10 | PROJECTION | 32mm |
| LENGTH | 188mm | WIDTH | 12mm |

| Available Colors | Item Number |
|---|---|
| Matte Black | P-50-160.BK |

**P-50M**
Arch Pull 128mm C/C

| | | | |
|---|---|---|---|
| CASE QTY | 200 | WEIGHT/CASE | 39 lbs |
| BOX QTY | 20 | PROJECTION | 32mm |
| LENGTH | 155mm | WIDTH | 10mm |

| Available Colors | Item Number |
|---|---|
| Oil Rubbed Bronze | P-50M.10B |
| Matte Black | P-50M.BK |
| Black Nickel | P-50M.BN |
| Dull Nickel | P-50M.DN |
| Polished Chrome | P-50M.PC |
| Satin Chrome | P-50M.SC |
| Satin Nickel | P-50M.SN |

# Pride Décor® Charleston Collections

## K-92230
28mm Square Knob

| | | | |
|---|---|---|---|
| CASE QTY | 250 | WEIGHT/CASE | 23 lbs |
| BOX QTY | 25 | PROJECTION | 26mm |
| LENGTH | 28mm | WIDTH | 28mm |

| Available Colors | Item Number |
|---|---|
| Oil Rubbed Bronze | K-92230.10B |
| Matte Black | K-92230.BK |
| Dark Pewter | K-92230.DP |
| Polished Chrome | K-92230.PC |
| Rose Gold | K-92230.RG |
| Satin Nickel | K-92230.SN |

## K-92430
36x28 Rectangular Knob

| | | | |
|---|---|---|---|
| CASE QTY | 250 | WEIGHT/CASE | 25 lbs |
| BOX QTY | 25 | PROJECTION | 26mm |
| LENGTH | 36mm | WIDTH | 28mm |

| Available Colors | Item Number |
|---|---|
| Oil Rubbed Bronze | K-92430.10B |
| Matte Black | K-92430.BK |
| Dark Pewter | K-92430.DP |
| Polished Chrome | K-92430.PC |
| Rose Gold | K-92430.RG |
| Satin Nickel | K-92430.SN |

## P-90396
Charleston Cup Pull 96mm C/C & 3" C/C

| | | | |
|---|---|---|---|
| CASE QTY | 150 | WEIGHT/CASE | 53 lbs |
| BOX QTY | 15 | PROJECTION | 21mm |
| LENGTH | 118mm | WIDTH | 42mm |

| Available Colors | Item Number |
|---|---|
| Oil Rubbed Bronze | P-90396.10B |
| Matte Black | P-90396.BK |
| Dark Pewter | P-90396.DP |
| Polished Chrome | P-90396.PC |
| Rose Gold | P-90396.RG |
| Satin Nickel | P-90396.SN |



# Pride Décor® Cup Pull Collection

## P-82981
Cup Pull 3" C/C

| | | | |
|---|---|---|---|
| CASE QTY | 200 | WEIGHT/CASE | 21 lbs |
| BOX QTY | 20 | PROJECTION | 28mm |
| LENGTH | 88.9mm | WIDTH | 32mm |

| Available Colors | Item Number |
|---|---|
| Oil Rubbed Bronze | P-82981.10B |
| Matte Black | P-82981.BK |
| Dark Pewter | P-82981.DP |
| Polished Chrome | P-82981.PC |
| Rose Gold | P-82981.RG |
| Satin Nickel | P-82981.SN |

## P-80753
Bin Pull 3" C/C

| | | | |
|---|---|---|---|
| CASE QTY | 250 | WEIGHT/CASE | 43 lbs |
| BOX QTY | 25 | PROJECTION | 28mm |
| LENGTH | 4-1/2" | WIDTH | 34mm |

| Available Colors | Item Number |
|---|---|
| Oil Rubbed Bronze | P-80753.10B |
| Antique Satin Brass | P-80753.ABSB |
| Satin Pewter | P-80753.APH |
| Matte Black | P-80753.BK |
| Polished Chrome | P-80753.PC |
| Rose Gold | P-80753.RG |
| Satin Nickel | P-80753.SN |

## P-953
Cup Pull 3" C/C

| | | | |
|---|---|---|---|
| CASE QTY | 250 | WEIGHT/CASE | 28 lbs |
| BOX QTY | 25 | PROJECTION | 35mm |
| LENGTH | 3-1/2" | WIDTH | 43mm |

| Available Colors | Item Number |
|---|---|
| Oil Rubbed Bronze | P-953.10B |
| Matte Black | P-953.BK |
| Polished Chrome | P-953.PC |
| Rose Gold | P-953.RG |
| Antique Silver | P-953.SIM |
| Satin Nickel | P-953.SN |

## P-8233
Hooded Cup Pull 3" C/C

| | | | |
|---|---|---|---|
| CASE QTY | 250 | WEIGHT/CASE | 38 lbs |
| BOX QTY | 25 | PROJECTION | 24mm |
| LENGTH | 5" | WIDTH | 33mm |

| Available Colors | Item Number |
|---|---|
| Oil Rubbed Bronze | P-8233.10B |
| Matte Black | P-8233.BK |
| Weathered Black | P-8233.DACM |
| Polished Chrome | P-8233.PC |
| Antique Silver | P-8233.SIM |
| Satin Nickel | P-8233.SN |

# Pride Décor® Tab Pulls

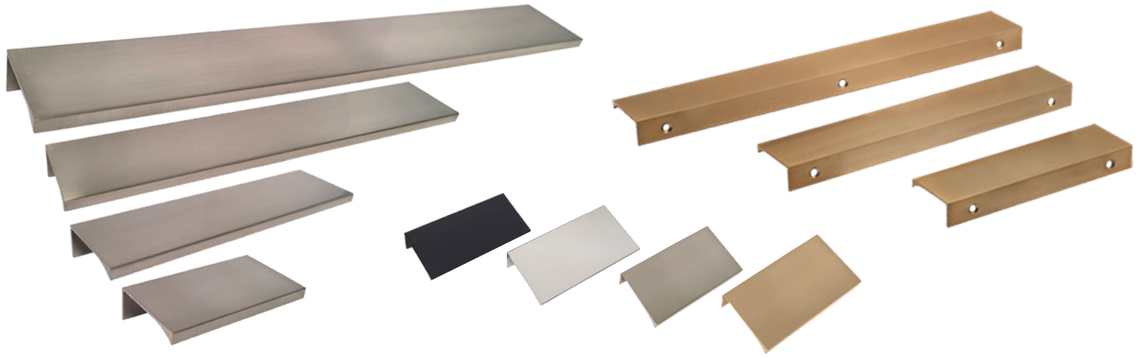

## P-1803
46mm C/C x 76mm (3") OL

| | | | |
|---|---|---|---|
| CASE QTY | 500 | WEIGHT/CASE | 26 lbs |
| BOX QTY | 50 | PROJECTION | 41mm |
| LENGTH | 76mm | WIDTH | 17mm |

| Available Colors | Item Number |
|---|---|
| Matte Black | P-1803.BK |
| Polished Chrome | P-1803.PC |
| Satin Nickel | P-1803.SN |
| Satin Gold | P-1803.SG |

## P-1809
189mm C/C x 229mm (9") OL

| | | | |
|---|---|---|---|
| CASE QTY | 180 | WEIGHT/CASE | 26 lbs |
| BOX QTY | 30 | PROJECTION | 41mm |
| LENGTH | 229mm | WIDTH | 17mm |

| Available Colors | Item Number |
|---|---|
| Matte Black | P-1809.BK |
| Polished Chrome | P-1809.PC |
| Satin Nickel | P-1809.SN |
| Satin Gold | P-1809.SG |

## P-1806
112mm C/C x 152mm (6") OL

| | | | |
|---|---|---|---|
| CASE QTY | 300 | WEIGHT/CASE | 32.8 lbs |
| BOX QTY | 30 | PROJECTION | 41mm |
| LENGTH | 152mm | WIDTH | 17mm |

| Available Colors | Item Number |
|---|---|
| Matte Black | P-1806.BK |
| Polished Chrome | P-1806.PC |
| Satin Nickel | P-1806.SN |
| Satin Gold | P-1806.SG |

## P-1812
132mm*2 C/C x 304mm (12") OL

| | | | |
|---|---|---|---|
| CASE QTY | 150 | WEIGHT/CASE | 30 lbs |
| BOX QTY | 25 | PROJECTION | 41mm |
| LENGTH | 304mm | WIDTH | 17mm |

| Available Colors | Item Number |
|---|---|
| Matte Black | P-1812.BK |
| Polished Chrome | P-1812.PC |
| Satin Nickel | P-1812.SN |
| Satin Gold | P-1812.SG |

## P-1876
Perfect Edge Pull 60mm C/C 76mm OL

| | | | |
|---|---|---|---|
| CASE QTY | 250 | WEIGHT/CASE | 21.4 lbs |
| BOX QTY | 25 | PROJECTION | 38mm |
| LENGTH | 76mm | WIDTH | 41mm |

| Available Colors | Item Number |
|---|---|
| Oil Rubbed Bronze | P-1876.10B |
| Matte Black | P-1876.BK |
| Polished Chrome | P-1876.PC |
| Satin Nickel | P-1876.SN |



## P-80014
2" Edge Pull

| | | | |
|---|---|---|---|
| CASE QTY | 250 | WEIGHT/CASE | 41 lbs |
| BOX QTY | 25 | PROJECTION | 37mm |
| LENGTH | 37mm | WIDTH | 50mm |

| Available Colors | Item Number |
|---|---|
| Oil Rubbed Bronze | P-80014.10B |
| Matte Black | P-80014.BK |
| Satin Nickel | P-80014.SN |

## K-1667
Bar Knob 32mm C/C x 48mm

| | | | |
|---|---|---|---|
| CASE QTY | 250 | WEIGHT/CASE | 48 lbs |
| BOX QTY | 25 | PROJECTION | 22.4mm |
| LENGTH | 48mm | WIDTH | 48mm |

| Available Colors | Item Number |
|---|---|
| Oil Rubbed Bronze | K-1667.10B |
| Polished Chrome | K-1667.PC |
| Satin Nickel | K-1667.SN |

## P-80215
Contemporary Pull 96mm C/C

| | | | |
|---|---|---|---|
| CASE QTY | 200 | WEIGHT/CASE | 41 lbs |
| BOX QTY | 25 | PROJECTION | 20mm |
| LENGTH | 148mm | WIDTH | 17mm |

Metric Threads

| Available Colors | Item Number |
|---|---|
| Black Wrinkle Powder | P-80215.BKW |
| Dull Nickel | P-80215.DN |
| Satin Nickel | P-80215.SN |

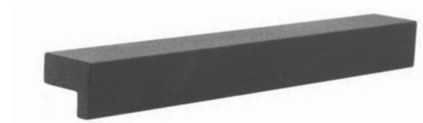

## P-80846
Waterfall Pull 96mm C/C x 6-3/4" OL

| | | | |
|---|---|---|---|
| CASE QTY | 250 | WEIGHT/CASE | 36 lbs |
| BOX QTY | 25 | PROJECTION | 18mm |
| LENGTH | 6-3/4" | WIDTH | 18mm |

| Available Colors | Item Number |
|---|---|
| Oil Rubbed Bronze | P-80846.10B |
| Matte Black | P-80846.BK |
| Satin Nickel | P-80846.SN |

## P-80846.128
Waterfall Pull 128mm C/C x 6-3/4" OL

| | | | |
|---|---|---|---|
| CASE QTY | 250 | WEIGHT/CASE | 41 lbs |
| BOX QTY | 25 | PROJECTION | 18mm |
| LENGTH | 6-3/4" | WIDTH | 18mm |

| Available Colors | Item Number |
|---|---|
| Matte Black | P-80846.128.BK |
| Satin Nickel | P-80846.128.SN |

## K-86618
65mm Deco Knob

| | | | |
|---|---|---|---|
| CASE QTY | 250 | WEIGHT/CASE | 46 lbs |
| BOX QTY | 25 | PROJECTION | 30mm |
| LENGTH | 65mm | WIDTH | 18mm |

| Available Colors | Item Number |
|---|---|
| Oil Rubbed Bronze | K-86618.10B |
| Antique Satin Brass | K-86618.ABSB |
| Satin Pewter | K-86618.APH |
| Weathered Black | K-86618.DACM |
| Rose Gold | K-86618.RG |
| Satin Nickel | K-86618.SN |

## P-86718
Deco Pull 128mm C/C

| | | | |
|---|---|---|---|
| CASE QTY | 250 | WEIGHT/CASE | 58 lbs |
| BOX QTY | 25 | PROJECTION | 36mm |
| LENGTH | 145mm | WIDTH | 18mm |

| Available Colors | Item Number |
|---|---|
| Oil Rubbed Bronze | P-86718.10B |
| Antique Satin Brass | P-86718.ABSB |
| Satin Pewter | P-86718.APH |
| Weathered Black | P-86718.DACM |
| Rose Gold | P-86718.RG |
| Satin Nickel | P-86718.SN |

## K-972
30mm Braided Knob

| | | | |
|---|---|---|---|
| CASE QTY | 250 | WEIGHT/CASE | 31 lbs |
| BOX QTY | 25 | PROJECTION | 22mm |
| DIAMETER | 30mm | | |

| Available Colors | Item Number |
|---|---|
| Oil Rubbed Bronze | K-972.10B |
| Antique Satin Brass | K-972.ABSB |
| Satin Pewter | K-972.APH |
| Satin Nickel | K-972.SN |

## P-81366
Deco Pull 96mm C/C

| | | | |
|---|---|---|---|
| CASE QTY | 250 | WEIGHT/CASE | 33 lbs |
| BOX QTY | 25 | PROJECTION | 28mm |
| LENGTH | 118mm | WIDTH | 15mm |

| Available Colors | Item Number |
|---|---|
| Oil Rubbed Bronze | P-81366.10B |
| Antique Satin Brass | P-81366.ABSB |
| Satin Pewter | P-81366.APH |
| Satin Nickel | P-81366.SN |

## K-81784
30mm Rope Knob

| | | | |
|---|---|---|---|
| CASE QTY | 250 | WEIGHT/CASE | 26 lbs |
| BOX QTY | 25 | PROJECTION | 24mm |
| DIAMETER | 30mm | | |

| Available Colors | Item Number |
|---|---|
| Oil Rubbed Bronze | K-81784.10B |
| Weathered Black | K-81784.DACM |
| Satin Nickel | K-81784.SN |

## P-81297
Deco Bow Pull 96mm C/C

| | | | |
|---|---|---|---|
| CASE QTY | 250 | WEIGHT/CASE | 31 lbs |
| BOX QTY | 25 | PROJECTION | 26mm |
| LENGTH | 120mm | WIDTH | 6mm |

| Available Colors | Item Number |
|---|---|
| Oil Rubbed Bronze | P-81297.10B |
| Satin Pewter | P-81297.APH |
| Satin Nickel | P-81297.SN |

## K-81353
32mm Deco Knob

| | | | |
|---|---|---|---|
| CASE QTY | 250 | WEIGHT/CASE | 38 lbs |
| BOX QTY | 25 | PROJECTION | 26mm |
| DIAMETER | 32mm | | |

| Available Colors | Item Number |
|---|---|
| Oil Rubbed Bronze | K-81353.10B |
| Satin Pewter | K-81353.APH |
| Weathered Black | K-81353.DACM |
| Satin Nickel | K-81353.SN |

## P-86765
Deco Pull 3" C/C

| | | | |
|---|---|---|---|
| CASE QTY | 250 | WEIGHT/CASE | 31 lbs |
| BOX QTY | 25 | PROJECTION | 27mm |
| LENGTH | 120mm | WIDTH | 9mm |

| Available Colors | Item Number |
|---|---|
| Oil Rubbed Bronze | P-86765.10B |
| Antique Satin Brass | P-86765.ABSB |
| Satin Pewter | P-86765.APH |
| Weathered Black | P-86765.DACM |
| Satin Nickel | P-86765.SN |

**K-80576**
30mm Deco Knob

| | | | |
|---|---|---|---|
| **CASE QTY** | 250 | **WEIGHT/CASE** | 26 lbs |
| **BOX QTY** | 25 | **PROJECTION** | 26mm |
| **DIAMETER** | 30mm | | |

| Available Colors | Item Number |
|---|---|
| Oil Rubbed Bronze | K-80576.10B |
| Antique Satin Brass | K-80576.ABSB |
| Weathered Black | K-80576.DACM |
| Satin Nickel | K-80576.SN |

**P-83063**
Braided Pull 3" C/C

| | | | |
|---|---|---|---|
| **CASE QTY** | 250 | **WEIGHT/CASE** | 38 lbs |
| **BOX QTY** | 25 | **PROJECTION** | 25mm |
| **LENGTH** | 120mm | **WIDTH** | 14mm |

| Available Colors | Item Number |
|---|---|
| Oil Rubbed Bronze | P-83063.10B |
| Antique Satin Brass | P-83063.ABSB |
| Satin Pewter | P-83063.APH |
| Weathered Black | P-83063.DACM |
| Satin Nickel | P-83063.SN |

**P-80008**
Deco Pull 3" C/C

| | | | |
|---|---|---|---|
| **CASE QTY** | 250 | **WEIGHT/CASE** | 26 lbs |
| **BOX QTY** | 25 | **PROJECTION** | 23mm |
| **LENGTH** | 135mm | **WIDTH** | 18mm |

| Available Colors | Item Number |
|---|---|
| Oil Rubbed Bronze | P-80008.10B |
| Antique Satin Brass | P-80008.ABSB |
| Satin Pewter | P-80008.APH |
| Satin Nickel | P-80008.SN |

**K-80110**
30mm Deco Knob

| | | | |
|---|---|---|---|
| **CASE QTY** | 250 | **WEIGHT/CASE** | 31 lbs |
| **BOX QTY** | 25 | **PROJECTION** | 27mm |
| **DIAMETER** | 30mm | | |

| Available Colors | Item Number |
|---|---|
| Oil Rubbed Bronze | K-80110.10B |
| Weathered Black | K-80110.DACM |
| Satin Nickel | K-80110.SN |

**K-82115**
32mm Braided Knob

| | | | |
|---|---|---|---|
| **CASE QTY** | 250 | **WEIGHT/CASE** | 31 lbs |
| **BOX QTY** | 25 | **PROJECTION** | 25mm |
| **DIAMETER** | 32mm | | |

| Available Colors | Item Number |
|---|---|
| Oil Rubbed Bronze | K-82115.10B |
| Antique Satin Brass | K-82115.ABSB |
| Satin Pewter | K-82115.APH |
| Weathered Black | K-82115.DACM |
| Satin Nickel | K-82115.SN |

**P-80281**
Deco Pull 96mm C/C

| | | | |
|---|---|---|---|
| **CASE QTY** | 250 | **WEIGHT/CASE** | 56 lbs |
| **BOX QTY** | 25 | **PROJECTION** | 32mm |
| **LENGTH** | 116mm | **WIDTH** | 10mm |

| Available Colors | Item Number |
|---|---|
| Oil Rubbed Bronze | P-80281.10B |
| Satin Pewter | P-80281.APH |
| Weathered Black | P-80281.DACM |
| Satin Nickel | P-80281.SN |

## K-80960
32mm Deco Knob

| | | | |
|---|---|---|---|
| CASE QTY | 250 | WEIGHT/CASE | 31 lbs |
| BOX QTY | 25 | PROJECTION | 27mm |
| DIAMETER | 31.6mm | | |

| Available Colors | Item Number |
|---|---|
| Oil Rubbed Bronze | K-80960.10B |
| Satin Nickel | K-80960.SN |

## P-80290
Pull 3" C/C

| | | | |
|---|---|---|---|
| CASE QTY | 250 | WEIGHT/CASE | 28 lbs |
| BOX QTY | 25 | PROJECTION | 32mm |
| LENGTH | 85mm | WIDTH | 17mm |

| Available Colors | Item Number |
|---|---|
| Oil Rubbed Bronze | P-80290.10B |
| Satin Nickel | P-80290.SN |

## P-80289
Pull 96mmCC

| | | | |
|---|---|---|---|
| CASE QTY | 250 | WEIGHT/CASE | 28 lbs |
| BOX QTY | 25 | PROJECTION | 33mm |
| LENGTH | 108mm | WIDTH | 13mm |

| Available Colors | Item Number |
|---|---|
| Oil Rubbed Bronze | P-80289.10B |
| Satin Nickel | P-80289.SN |

ADA FRIENDLY ✓

## P-353
Wire Pull 3"CC

| | | | |
|---|---|---|---|
| CASE QTY | 250 | WEIGHT/CASE | 34 lbs |
| BOX QTY | 25 | PROJECTION | 32mm |
| LENGTH | 84.2mm | WIDTH | 8mm |

| Available Colors | Item Number |
|---|---|
| Oil Rubbed Bronze | P-353.10B |
| Matte Black | P-353.BK |
| Polished Brass | P-353.PB |
| Polished Chrome | P-353.PC |
| Satin Brass | P-353.SB |
| Satin Chrome | P-353.SC |
| Satin Nickel | P-353.SN |
| Stainless Steel | P-353.SS |
| White | P-353.WT |

## P-354
Wire Pull 3-1/2"CC

| | | | |
|---|---|---|---|
| CASE QTY | 250 | WEIGHT/CASE | 33 lbs |
| BOX QTY | 25 | PROJECTION | 32mm |
| LENGTH | 88.9mm | WIDTH | 8mm |

| Available Colors | Item Number |
|---|---|
| Oil Rubbed Bronze | P-354.10B |
| Matte Black | P-354.BK |
| Polished Chrome | P-354.PC |
| Satin Chrome | P-354.SC |
| Satin Nickel | P-354.SN |

## P-356 ✓
Wire Pull 5"CC

| | | | |
|---|---|---|---|
| CASE QTY | 250 | WEIGHT/CASE | 43 lbs |
| BOX QTY | 25 | PROJECTION | 32mm |
| LENGTH | 135mm | WIDTH | 8mm |

| Available Colors | Item Number |
|---|---|
| Satin Chrome | P-356.SC |
| Stainless Steel | P-356.SS |

## P-396 ✓
Wire Pull 96mm CC

| | | | |
|---|---|---|---|
| CASE QTY | 250 | WEIGHT/CASE | 36 lbs |
| BOX QTY | 25 | PROJECTION | 32mm |
| LENGTH | 104mm | WIDTH | 8mm |

| Available Colors | Item Number |
|---|---|
| Oil Rubbed Bronze | P-396.10B |
| Matte Black | P-396.BK |
| Polished Brass | P-396.PB |
| Polished Chrome | P-396.PC |
| Satin Brass | P-396.SB |
| Satin Chrome | P-396.SC |
| Satin Nickel | P-396.SN |
| Stainless Steel | P-396.SS |

## P-355 ✓
Wire Pull 4"CC

| | | | |
|---|---|---|---|
| CASE QTY | 250 | WEIGHT/CASE | 39 lbs |
| BOX QTY | 25 | PROJECTION | 32mm |
| LENGTH | 110mm | WIDTH | 8mm |

| Available Colors | Item Number |
|---|---|
| Oil Rubbed Bronze | P-355.10B |
| Aluminum | P-355.AL |
| Matte Black | P-355.BK |
| Black Nickel | P-355.BN |
| Polished Brass | P-355.PB |
| Polished Chrome | P-355.PC |
| Satin Brass | P-355.SB |
| Satin Chrome | P-355.SC |
| Satin Nickel | P-355.SN |
| Stainless Steel | P-355.SS |
| White | P-355.WT |

# Knob Options

## K-971
1-3/8" Knob

| | | | |
|---|---|---|---|
| **CASE QTY** | 250 | **WEIGHT/CASE** | 33 lbs |
| **BOX QTY** | 25 | **PROJECTION** | 25mm |
| **DIAMETER** | 35mm | | |

| Available Colors | Item Number |
|---|---|
| Oil Rubbed Bronze | K-971.10B |
| Antique Copper Machined | K-971.ACM |
| Matte Black | K-971.BK |
| Polished Chrome | K-971.PC |
| Rose Gold | K-971.RG |
| Antique Silver | K-971.SIM |
| Satin Nickel | K-971.SN |

## K-970
30mm Rope Knob

| | | | |
|---|---|---|---|
| **CASE QTY** | 250 | **WEIGHT/CASE** | 33 lbs |
| **BOX QTY** | 25 | **PROJECTION** | 26mm |
| **DIAMETER** | 30mm | | |

| Available Colors | Item Number |
|---|---|
| Oil Rubbed Bronze | K-970.10B |
| Antique Silver | K-970.SIM |
| Satin Nickel | K-970.SN |

## K-80980
32mm Knob

| | | | |
|---|---|---|---|
| **CASE QTY** | 250 | **WEIGHT/CASE** | 36 lbs |
| **BOX QTY** | 25 | **PROJECTION** | 24mm |
| **DIAMETER** | 31.6mm | | |

| Available Colors | Item Number |
|---|---|
| Oil Rubbed Bronze | K-80980.10B |
| Weathered Black | K-80980.DACM |
| Polished Chrome | K-80980.PC |
| Satin Nickel | K-80980.SN |

## K-928
31mm Knob

| | | | |
|---|---|---|---|
| **CASE QTY** | 250 | **WEIGHT/CASE** | 42 lbs |
| **BOX QTY** | 25 | **PROJECTION** | 26mm |
| **DIAMETER** | 31mm | **WIDTH** | 31mm |

| Available Colors | Item Number |
|---|---|
| Oil Rubbed Bronze | K-928.10B |
| Polished Chrome | K-928.PC |
| Satin Nickel | K-928.SN |



## K-910
30mm Mushroom Knob

| | | | |
|---|---|---|---|
| **CASE QTY** | 250 | **WEIGHT/CASE** | 33 lbs |
| **BOX QTY** | 25 | **PROJECTION** | 28mm |
| **DIAMETER** | 30mm | | |

| Available Colors | Item Number |
|---|---|
| Oil Rubbed Bronze | K-910.10B |
| Antique Brass | K-910.AB |
| Matte Black | K-910.BK |
| Black Nickel | K-910.BN |
| Weathered Black | K-910.DACM |
| Dark Pewter | K-910.DP |
| Polished Brass | K-910.PB |
| Polished Chrome | K-910.PC |
| Rose Gold | K-910.RG |
| Satin Brass | K-910.SB |
| Satin Chrome | K-910.SC |
| Satin Nickel | K-910.SN |
| White | K-910.WT |

## K-910H
30mm Island Knob

| | | | |
|---|---|---|---|
| **CASE QTY** | 250 | **WEIGHT/CASE** | 14.5 lbs |
| **BOX QTY** | 25 | **PROJECTION** | 28mm |
| **DIAMETER** | 30mm | | |

| Available Colors | Item Number |
|---|---|
| Oil Rubbed Bronze | K-910H.10B |
| Polished Chrome | K-910H.PC |
| Satin Nickel | K-910H.SN |

## K-810.SN
Mini Mushroom Knob 25mm Dia H=24.4mm with 1-1/4" screw

| | | | |
|---|---|---|---|
| **CASE QTY** | 250 | **WEIGHT/CASE** | 18 lbs |
| **BOX QTY** | 25 | **PROJECTION** | 24.4mm |
| **DIAMETER** | 25mm | | |

# Knob Options

**K-83990**
1-1/4" Football Knob

| | | | |
|---|---|---|---|
| CASE QTY | 250 | WEIGHT/CASE | 36 lbs |
| BOX QTY | 25 | PROJECTION | 41mm |
| LENGTH | 32mm | WIDTH | 21mm |

| Available Colors | Item Number |
|---|---|
| Oil Rubbed Bronze | K-83990.10B |
| Matte Black | K-83990.BK |
| Weathered Black | K-83990.DACM |
| Satin Nickel | K-83990.SN |

**K-83991**
1-5/8" Football Knob

| | | | |
|---|---|---|---|
| CASE QTY | 250 | WEIGHT/CASE | 61 lbs |
| BOX QTY | 25 | PROJECTION | 41mm |
| LENGTH | 41mm | WIDTH | 23mm |

| Available Colors | Item Number |
|---|---|
| Oil Rubbed Bronze | K-83991.10B |
| Matte Black | K-83991.BK |
| Weathered Black | K-83991.DACM |
| Satin Nickel | K-83991.SN |

**K-82980**
1-1/4" Diecast Knob Satin Nickel

| | | | |
|---|---|---|---|
| CASE QTY | 250 | WEIGHT/CASE | 44 lbs |
| BOX QTY | 25 | PROJECTION | 29mm |
| DIAMETER | 32mm | | |

| Available Colors | Item Number |
|---|---|
| Matte Black | K-82980.BK |
| Polished Chrome | K-82980.PC |
| Satin Nickel | K-82980.SN |

**K-53082**
32mm Pyramid Top Knob Satin Nickel

| | | | |
|---|---|---|---|
| CASE QTY | 250 | WEIGHT/CASE | 38 lbs |
| BOX QTY | 25 | PROJECTION | 22mm |
| LENGTH | 32mm | WIDTH | 32mm |

| Available Colors | Item Number |
|---|---|
| Oil Rubbed Bronze | K-53082.10B |
| Polished Chrome | K-53082.PC |
| Satin Nickel | K-53082.SN |

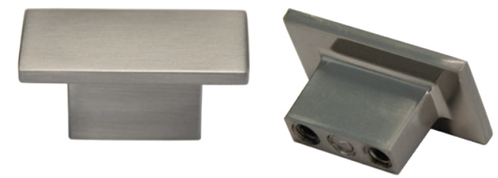

**K-81021.SN**
22x40mm 16mm C/C Rectangular Knob
Satin Nickel W/1-3/4" Breakaway Screw

| | | | |
|---|---|---|---|
| CASE QTY | 250 | WEIGHT/CASE | 21 lbs |
| BOX QTY | 25 | PROJECTION | 19mm |
| LENGTH | 40mm | WIDTH | 22mm |

**K-6361.SN**
31mm Knob Satin Nickel

| | | | |
|---|---|---|---|
| CASE QTY | 250 | WEIGHT/CASE | 18 lbs |
| BOX QTY | 25 | PROJECTION | 23mm |
| DIAMETER | 31mm | | |

**K-3910**
30.2mm Knob

| | | | |
|---|---|---|---|
| CASE QTY | 250 | WEIGHT/CASE | 34 lbs |
| BOX QTY | 25 | PROJECTION | 29mm |
| DIAMETER | 30.2mm | | |

| Available Colors | Item Number |
|---|---|
| Oil Rubbed Bronze | K-3910.10B |
| Polished Chrome | K-3910.PC |
| Satin Nickel | K-3910.SN |

**K-7141.SN**
1-1/4 Knob Satin Nickel W/O screws Bulk Pack

| | | | |
|---|---|---|---|
| CASE QTY | 250 | WEIGHT/CASE | 12 lbs |
| BOX QTY | BULK | PROJECTION | 21mm |
| DIAMETER | 31.7mm | | |

**K-6030.BK**
17mm Knob Matte Black

| | | | |
|---|---|---|---|
| CASE QTY | 500 | WEIGHT/CASE | 26 lbs |
| BOX QTY | 50 | PROJECTION | 20mm |
| DIAMETER | 17.5mm | | |

# Arched Pull Residential

**P-4655**
Bow Pull 128mm CC

| | | | |
|---|---|---|---|
| CASE QTY | 250 | WEIGHT/CASE | 38 lbs |
| BOX QTY | 25 | PROJECTION | 32mm |
| LENGTH | 160mm | WIDTH | 6mm |

| Available Colors | Item Number |
|---|---|
| Matte Black | P-4655.BK |
| Satin Nickel | P-4655.SN |

**P-8065.SN**
Deco Pull 96mm CC Satin Nickel

| | | | |
|---|---|---|---|
| CASE QTY | 250 | WEIGHT/CASE | 26 lbs |
| BOX QTY | 25 | PROJECTION | 27mm |
| LENGTH | 130mm | WIDTH | 5mm |

**P-8731.SN**
Wave Pull 96mm CC Satin Nickel

| | | | |
|---|---|---|---|
| CASE QTY | 250 | WEIGHT/CASE | 33 lbs |
| BOX QTY | 25 | PROJECTION | 24mm |
| LENGTH | 130mm | WIDTH | 7mm |

**P-81065.SN**
Pull 128mm CC

| | | | |
|---|---|---|---|
| CASE QTY | 120 | WEIGHT/CASE | 26.5 lbs |
| BOX QTY | 25 | PROJECTION | 25.5mm |
| LENGTH | 156.6mm | WIDTH | 10.5mm |

**P-A012.SN**
45mm Oval Pull 16mm CC Satin Nickel

| | | | |
|---|---|---|---|
| CASE QTY | 120 | WEIGHT/CASE | 41 lbs |
| BOX QTY | 20 | PROJECTION | 29mm |
| LENGTH | 160mm | WIDTH | 19mm |

**P-7166.SN**
Bow Pull 96mm CC Satin Nickel

| | | | |
|---|---|---|---|
| CASE QTY | 250 | WEIGHT/CASE | 29.20 lbs |
| BOX QTY | 25 | PROJECTION | 28mm |
| LENGTH | 116mm | WIDTH | 5mm |

**P-888.SN**
Contemporary Pull 128mm CC Satin Nickel

| | | | |
|---|---|---|---|
| CASE QTY | 250 | WEIGHT/CASE | 23 lbs |
| BOX QTY | 25 | PROJECTION | 26mm |
| LENGTH | 155mm | WIDTH | 7mm |

**P-81145**
Arch Pull Flat Top 128mm CC

| | | | |
|---|---|---|---|
| CASE QTY | 250 | WEIGHT/CASE | 41 lbs |
| BOX QTY | 25 | PROJECTION | 27mm |
| LENGTH | 154mm | WIDTH | 14mm |

| Available Colors | Item Number |
|---|---|
| Matte Black | P-81145.BK |
| Dull Nickel | P-81145.DN |

# Pull Options

**P-092910**
Dimpled Pull 128mm CC

| | | | |
|---|---|---|---|
| **CASE QTY** | 250 | **WEIGHT/CASE** | 48 lbs |
| **BOX QTY** | 25 | **PROJECTION** | 29mm |
| **LENGTH** | 158mm | **WIDTH** | 16mm |

| Available Colors | Item Number |
|---|---|
| Oil Rubbed Bronze | P-092910.10B |
| Matte Black | P-092910.BK |
| Satin Nickel | P-092910.SN |

**P-80814**
Pull 96mm CC

| | | | |
|---|---|---|---|
| **CASE QTY** | 250 | **WEIGHT/CASE** | 27 lbs |
| **BOX QTY** | 25 | **PROJECTION** | 22mm |
| **LENGTH** | 127mm | **WIDTH** | 11mm |

| Available Colors | Item Number |
|---|---|
| Oil Rubbed Bronze | P-80814.10B |
| Satin Nickel | P-80814.SN |

**P-88760.10B**
Pull 96mm CC Oil Rubbed Bronze

| | | | |
|---|---|---|---|
| **CASE QTY** | 250 | **WEIGHT/CASE** | 51 lbs |
| **BOX QTY** | 25 | **PROJECTION** | 25mm |
| **LENGTH** | 123mm | **WIDTH** | 8mm |

**P-8004.SN**
4-7/8" OL 96mm C/C Pull Satin Nickel

| | | | |
|---|---|---|---|
| **CASE QTY** | 250 | **WEIGHT/CASE** | 27 lbs |
| **BOX QTY** | 25 | **PROJECTION** | 27mm |
| **LENGTH** | 125mm | **WIDTH** | 9.5mm |

**P-675.BK/SS**
Recessed Pull with Stainless Steel Face

| | | | |
|---|---|---|---|
| **CASE QTY** | 250 | **WEIGHT/CASE** | 23 lbs |
| **BOX QTY** | 25 | **PROJECTION** | -23mm |
| **LENGTH** | 114mm | **WIDTH** | 32mm |

Recess is 32mm x 98mm

**P-847**
Pull 3" CC

| | | | |
|---|---|---|---|
| **CASE QTY** | 250 | **WEIGHT/CASE** | 33 lbs |
| **BOX QTY** | 25 | **PROJECTION** | 28mm |
| **LENGTH** | 128mm | **WIDTH** | 12mm |

| Available Colors | Item Number |
|---|---|
| Oil Rubbed Bronze | P-847.10B |
| Weathered Nickel | P-847.BNMDL |
| Satin Nickel | P-847.SN |

**P-433**
Pull 3" CC

| | | | |
|---|---|---|---|
| **CASE QTY** | 250 | **WEIGHT/CASE** | 21 lbs |
| **BOX QTY** | 25 | **PROJECTION** | 20mm |
| **LENGTH** | 128mm | **WIDTH** | 11mm |

| Available Colors | Item Number |
|---|---|
| Oil Rubbed Bronze | P-433.10B |
| Satin Nickel | P-433.SN |

# Pride Décor® Furniture Pulls

**P-955**
Rope Pull 3" CC

| | | | |
|---|---|---|---|
| CASE QTY | 250 | WEIGHT/CASE | 38 lbs |
| BOX QTY | 25 | PROJECTION | 30mm |
| LENGTH | 95mm | WIDTH | 12mm |

| Available Colors | Item Number |
|---|---|
| Oil Rubbed Bronze | P-955.10B |
| Satin Nickel | P-955.SN |

**K-82928**
Fleur di Lis Knob

| | | | |
|---|---|---|---|
| CASE QTY | 250 | WEIGHT/CASE | 43 lbs |
| BOX QTY | 25 | PROJECTION | 28mm |
| LENGTH | 48mm | WIDTH | 36mm |

| Available Colors | Item Number |
|---|---|
| Oil Rubbed Bronze | K-82928.10B |
| Antique Satin Brass | K-82928.ABSB |
| Satin Pewter | K-82928.APH |

**K-82142.SN**
Knob with Finger Pull 20x26mm

| | | | |
|---|---|---|---|
| CASE QTY | 250 | WEIGHT/CASE | 18 lbs |
| BOX QTY | 25 | PROJECTION | 26mm |
| LENGTH | 26mm | WIDTH | 20mm |



# Pride Décor® Mission Pulls & Knobs

**P-1011.BK**
Mission Pull 3" CC Matte Black

| | | | |
|---|---|---|---|
| CASE QTY | 200 | WEIGHT/CASE | 56 lbs |
| BOX QTY | 20 | PROJECTION | 42mm |
| LENGTH | 96mm | WIDTH | 9mm |

**K-1012.BK**
Mission Knocker Matte Black

| | | | |
|---|---|---|---|
| CASE QTY | 250 | WEIGHT/CASE | 33 lbs |
| BOX QTY | 25 | PROJECTION | 60mm |
| LENGTH | 48mm | WIDTH | 96mm |

**K-7141.BLAE**
1-1/4 Knob Antique Black W/O screws Bulk Pack

| | | | |
|---|---|---|---|
| CASE QTY | 250 | WEIGHT/CASE | 18 lbs |
| BOX QTY | BULK | PROJECTION | 21mm |
| DIAMETER | 31.7mm | | |

# PRIDE DÉCOR® Hooks

## CH-1003.PC
Single Coat Hook Polished Chrome

| | | | |
|---|---|---|---|
| CASE QTY | 250 | WEIGHT/CASE | 18 lbs |
| BOX QTY | 25 | PROJECTION | 41.5mm |
| LENGTH | 38mm | WIDTH | 31mm |

## CH-8363.PC
Side by Side Double Coat Hook Polished Chrome

| | | | |
|---|---|---|---|
| CASE QTY | 250 | WEIGHT/CASE | 26 lbs |
| BOX QTY | 25 | PROJECTION | 30mm |
| LENGTH | 32mm | WIDTH | 56mm |

## CH-81160.BK
Vertical Double Coat Hook Matte Black

| | | | |
|---|---|---|---|
| CASE QTY | 250 | WEIGHT/CASE | 26 lbs |
| BOX QTY | 25 | PROJECTION | 78.5mm |
| LENGTH | 30mm | WIDTH | 56mm |

## CH-81160.PC
Vertical Double Coat Hook Polished Chrome

| | | | |
|---|---|---|---|
| CASE QTY | 250 | WEIGHT/CASE | 26 lbs |
| BOX QTY | 25 | PROJECTION | 78.5mm |
| LENGTH | 30mm | WIDTH | 56mm |

# PRIDE DÉCOR® Closet Rods

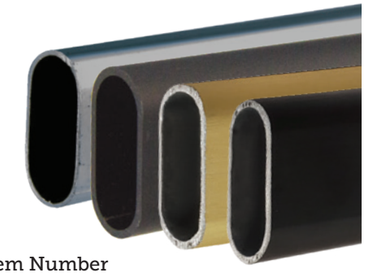

## CR-50
Closet Rod 8 Ft Oval
30mm x 15mm x 1.0mm

8′ 1mm

| Available Colors | Item Number |
|---|---|
| Chrome Plated | CR-50.CP (Case: 10 Steel) |
| Matte Black | CR-50.BK (Case: 10 Steel) |
| Satin Nickel | CR-50.SN (Case: 10 Steel) |

## CR-51.CP
Closet Rod 12 Ft Oval
30mm x 15mm x 1.0mm Steel Chrome Plated

12′ 1mm

| Available Colors | Item Number |
|---|---|
| Chrome Plated | CR-51.CP (Case: 10) |

## CR-52
Closet Rod 8 Ft Oval
30mm x 15mm x 1.5mm Aluminum

8′ 1.5mm

| Available Colors | Item Number |
|---|---|
| Satin Brass | CR-52.SB (Case: 20) |
| Oil Rubbed Bronze | CR-52.ORB (Case: 20 Alum) |

## CR-75.CP
Closet Rod 6 Ft Round
1-1/16 Dia x 1.2mm Steel Chrome Plated

6′ 1-1/16 Dia 1.2mm

| Available Colors | Item Number |
|---|---|
| Chrome Plated | CR-75.CP (Case: 10) |

## CR-70
Closet Rod 8 Ft Round
1-1/16 Dia x 1.2mm Steel Chrome Plated

8′ 1-1/16 Dia 1.2mm

| Available Colors | Item Number |
|---|---|
| Chrome Plated | CR-70.CP (Case: 10) |
| Matte Black | CR-70.BK (Case: 10) |
| Satin Nickel | CR-70.SN (Case: 10) |

## CR-77.CP
Closet Rod 10 Ft Round
1-1/16 Dia x 1.2mm Steel Chrome Plated

10′ 1-1/16 Dia 1.2mm

| Available Colors | Item Number |
|---|---|
| Chrome Plated | CR-77.CP (Case: 10) |

## CR-72.CP
Closet Rod 12 Ft Round
1-1/16 Dia x 1.2mm Steel Chrome Plated

12′ 1-1/16 Dia 1.2mm

| Available Colors | Item Number |
|---|---|
| Chrome Plated | CR-72.CP (Case: 10) |

## CR-71.CP
Closet Rod 8 Ft Round Heavy Duty
1-1/16 Dia x 2.0mm Steel Chrome Plated

8′ 1-1/16 Dia 2mm

| Available Colors | Item Number |
|---|---|
| Chrome Plated | CR-71.CP (Case: 5) |

## CR-73.CP
Closet Rod 12 Ft Round Heavy Duty
1-1/16 Dia x 2.0mm Steel Chrome Plated

12′ 1-1/16 Dia 2mm

| Available Colors | Item Number |
|---|---|
| Chrome Plated | CR-73.CP (Case: 5) |

## CR-60.CP
Closet Rod 8 Ft Round
1-1/4 Dia x 1.2mm Steel Chrome Plated

8′ 1-1/4 Dia 1.2mm

| Available Colors | Item Number |
|---|---|
| Chrome Plated | CR-60.CP (Case: 10) |

## CR-62.CP
Closet Rod 12 Ft Round
1-1/4 Dia x 1.2mm Steel Chrome Plated

12′ 1-1/4 Dia 1.2mm

| Available Colors | Item Number |
|---|---|
| Chrome Plated | CR-62.CP (Case: 10) |

## CR-80
Closet Rod 8 Ft Round Heavy Duty
1-5/16 Dia x 2.0mm

8′ 1-5/16 Dia 2mm

| Available Colors | Item Number |
|---|---|
| Chrome Plated | CR-80.CP (Case: 5 Steel) |
| Oil Rubbed Bronze | CR-80.ORB (Case: 20 Alum) |
| Matte Black | CR-80.BK (Case: 5 Steel) |
| Satin Nickel | CR-80.SN (Case: 5 Steel) |

## CR-81.CP
Closet Rod 12 Ft Round Heavy Duty
1-5/16 Dia x 2.0mm Steel Chrome Plated

12′ 1-5/16 Dia 2mm

| Available Colors | Item Number |
|---|---|
| Chrome Plated | CR-81.CP (Case: 5) |

FOR

## CRCS-58
Closet Rod Oval Center Support

| Available Colors | Item Number | |
|---|---|---|
| Oil Rubbed Bronze | CRCS-58.ORB | Box: 50 |
| Matte Black | CRCS-58.BK | Box: 50 |
| Chrome Plated | CRCS-58.CP | Box: 50 |
| Satin Brass | CRCS-58.SB | Box: 50 |
| Satin Nickel | CRCS-58.SN | Box: 50 |

FOR 1-1/4 Dia

## CRCS-68.CP
Closet Rod 1-1/4 Round Center Support

| Available Colors | Item Number | |
|---|---|---|
| Chrome Plated | CRCS-68.CP | Box: 20 |

FOR

## CRS-54
Closet Rod Oval Socket Screw On

| Available Colors | Item Number | |
|---|---|---|
| Oil Rubbed Bronze | CRS-54.ORB | Box: 100 |
| Matte Black | CRS-54.BK | Box: 100 |
| Chrome Plated | CRS-54.CP | Box: 100 |
| Satin Brass | CRS-54.SB | Box: 100 |
| Satin Nickel | CRS-54.SN | Box: 100 |

FOR

## CRS-56
Closet Rod Oval Socket w/ 5mm Pins

| Available Colors | Item Number | |
|---|---|---|
| Oil Rubbed Bronze | CRS-56.ORB | Box: 100 |
| Matte Black | CRS-56.BK | Box: 100 |
| Chrome Plated | CRS-56.CP | Box: 100 |
| Satin Brass | CRS-56.SB | Box: 100 |
| Satin Nickel | CRS-56.SN | Box: 100 |

FOR 1-1/4 Dia

## CRS-64.CP
Closet Rod 1-1/4 Round Socket Open End

| Available Colors | Item Number | |
|---|---|---|
| Chrome Plated | CRS-64.CP | Box: 50 |

FOR 1-1/4 Dia

## CRS-66.CP
Closet Rod 1-1/4 Round Socket Closed

| Available Colors | Item Number | |
|---|---|---|
| Chrome Plated | CRS-66.CP | Box: 50 |

FOR 1-1/16 Dia

## CRS-74
Closet Rod 1-1/16 Round Socket Open End

| Available Colors | Item Number | |
|---|---|---|
| Chrome Plated | CRS-74.CP | Box: 50 |
| Matte Black | CRS-74.BK | Box: 50 |
| Satin Nickel | CRS-74.SN | Box: 50 |

FOR 1-1/16 Dia

## CRS-76
Closet Rod 1-1/16 Round Socket Closed

| Available Colors | Item Number | |
|---|---|---|
| Chrome Plated | CRS-76.CP | Box: 50 |
| Matte Black | CRS-76.BK | Box: 50 |
| Satin Nickel | CRS-76.SN | Box: 50 |

FOR 1-5/16 Dia

## CRS-84
Closet Rod 1-5/16 Round Socket Open End

| Available Colors | Item Number | |
|---|---|---|
| Oil Rubbed Bronze | CRS-84.ORB | Box: 20 |
| Chrome Plated | CRS-84.CP | Box: 20 |
| Matte Black | CRS-84.BK | Box: 20 |
| Satin Nickel | CRS-84.SN | Box: 20 |

FOR 1-5/16 Dia

## CRS-85
Closet Rod 1-5/16 Round Socket Closed

| Available Colors | Item Number | |
|---|---|---|
| Oil Rubbed Bronze | CRS-85.ORB | Box: 20 |
| Chrome Plated | CRS-85.CP | Box: 20 |
| Matte Black | CRS-85.BK | Box: 20 |
| Satin Nickel | CRS-85.SN | Box: 20 |

FOR 1-1/16 Dia

## CRCS-78
Closet Rod 1-1/16 Round Center Support

| Available Colors | Item Number | |
|---|---|---|
| Chrome Plated | CRCS-78.CP | Box: 25 |
| Matte Black | CRCS-78.BK | Box: 25 |

FOR 1-5/16 Dia

## CRCS-88
Closet Rod 1-5/16 Round Center Support

| Available Colors | Item Number | |
|---|---|---|
| Chrome Plated | CRCS-88.CP | Box: 25 |
| Oil Rubbed Bronze | CRCS-88.ORB | Box: 25 |

FOR 1-5/16 Dia

## CRS-86
Closet Rod 1-5/16 Round Socket w/ 5mm Pins Open End

| Available Colors | Item Number | |
|---|---|---|
| Oil Rubbed Bronze | CRS-86.ORB | Box: 50 |
| Chrome Plated | CRS-86.CP | Box: 50 |

FOR 1-5/16 Dia

## CRS-87
Closet Rod 1-5/16 Round Socket w/ 5mm Pins Closed

| Available Colors | Item Number | |
|---|---|---|
| Oil Rubbed Bronze | CRS-87.ORB | Box: 50 |
| Chrome Plated | CRS-87.CP | Box: 50 |

# DECORATIVE WOOD

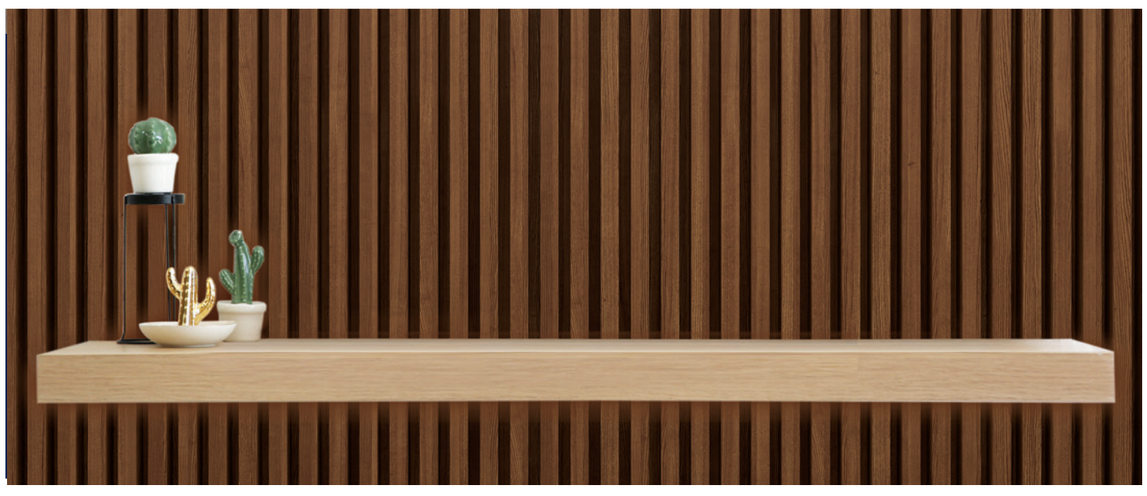





## FLOATING SHELVES

**Maple**

**Walnut**

**White Oak**

### Floating Shelf With 2 pcs brackets

**FSM1012**

| | |
|---|---|
| Weight | 6.05 lbs |
| Width | 10″ |
| Length | 12″ |
| Thickness | 2.5″ |
| Wt. Capacity | 22.5 lbs |

**FSWALNUT12**

| | |
|---|---|
| Weight | 5.17 lbs |
| Width | 10″ |
| Length | 12″ |
| Thickness | 2.5″ |
| Wt. Capacity | 22.5 lbs |

**FSWTOAK12**

| | |
|---|---|
| Weight | 4.84 lbs |
| Width | 10″ |
| Length | 12″ |
| Thickness | 2.5″ |
| Wt. Capacity | 22.5 lbs |

**FSM1024**

| | |
|---|---|
| Weight | 8.91 lbs |
| Width | 10″ |
| Length | 24″ |
| Thickness | 2.5″ |
| Wt. Capacity | 30 lbs |

**FSWALNUT24**

| | |
|---|---|
| Weight | 8.58 lbs |
| Width | 10″ |
| Length | 24″ |
| Thickness | 2.5″ |
| Wt. Capacity | 30 lbs |

**FSWTOAK24**

| | |
|---|---|
| Weight | 8.25 lbs |
| Width | 10″ |
| Length | 24″ |
| Thickness | 2.5″ |
| Wt. Capacity | 30 lbs |

**FSM1030**

| | |
|---|---|
| Weight | 10.4 lbs |
| Width | 10″ |
| Length | 30″ |
| Thickness | 2.5″ |
| Wt. Capacity | 37.5 lbs |

**FSWALNUT30**

| | |
|---|---|
| Weight | 10.45 lbs |
| Width | 10″ |
| Length | 30″ |
| Thickness | 2.5″ |
| Wt. Capacity | 37.5 lbs |

**FSWTOAK30**

| | |
|---|---|
| Weight | 10.45 lbs |
| Width | 10″ |
| Length | 30″ |
| Thickness | 2.5″ |
| Wt. Capacity | 37.5 lbs |

### Floating Shelf With 3 pcs brackets

**FSM1036**

| | |
|---|---|
| Weight | 12 lbs |
| Width | 10″ |
| Length | 36″ |
| Thickness | 2.5″ |
| Wt. Capacity | 45 lbs |

**FSWALNUT36**

| | |
|---|---|
| Weight | 12.43 lbs |
| Width | 10″ |
| Length | 36″ |
| Thickness | 2.5″ |
| Wt. Capacity | 45 lbs |

**FSWTOAK36**

| | |
|---|---|
| Weight | 12.10 lbs |
| Width | 10″ |
| Length | 36″ |
| Thickness | 2.5″ |
| Wt. Capacity | 45 lbs |

**FSM1042**

| | |
|---|---|
| Weight | 14.96 lbs |
| Width | 10″ |
| Length | 42″ |
| Thickness | 2.5″ |
| Wt. Capacity | 52.5 lbs |

**FSWALNUT42**

| | |
|---|---|
| Weight | 14.08 lbs |
| Width | 10″ |
| Length | 42″ |
| Thickness | 2.5″ |
| Wt. Capacity | 52.5 lbs |

**FSWTOAK42**

| | |
|---|---|
| Weight | 13.86 lbs |
| Width | 10″ |
| Length | 42″ |
| Thickness | 2.5″ |
| Wt. Capacity | 52.5 lbs |

**FSBRKT**
Brackets with screws for Floating Shelves
**Weight 0.33lbs each**

**CORBEL-KL-**
Craftsman Corbel
13.75 x 8 x 5

| Species | Item Number |
|---|---|
| Maple | CORBEL-KL-MP |
| Rubberwood | CORBEL-KL-RW |

**CORBEL-K-**
Craftsman Corbel
10 x 7 x 3.5

| Species | Item Number |
|---|---|
| Alder | CORBEL-K-AL |
| Rubberwood | CORBEL-K-RW |

**CORBEL-A-15-**
Contemp Corbel
10.1 x 3.75 x 5.375

| Species | Item Number |
|---|---|
| Rubberwood | CORBEL-A-15-RW |

**CORBEL-M-13-**
Shaker Corbel
9 x 4.1 x 3.15

| Species | Item Number |
|---|---|
| Rubberwood | CORBEL-M-13-RW |

**POST-K-**
Square Fluted Post
35.25 x 3.5 x 3.5

| Species | Item Number |
|---|---|
| Maple | POST-K-MP |
| Rubberwood | POST-K-RW |

**POST-K-5X42-**
Square Fluted Post
42 x 5 x 5

| Species | Item Number |
|---|---|
| Rubberwood | POST-K-5X42-RW |

**POST-X-**
Shaker Post
35.25 x 3.5 x 3.5

| Species | Item Number |
|---|---|
| Rubberwood | POST-X-RW |

**POST-X-5X42-**
Shaker Post
42 x 5 x 5

| Species | Item Number |
|---|---|
| Alder | POST-X-5X42-AL |
| Maple | POST-X-5X42-MP |
| Rubberwood | POST-X-5X42-RW |

**POST-S-**
Square Post
35.25 x 3.5 x 3.5

| Species | Item Number |
|---|---|
| Rubberwood | POST-S-RW |

**POST-S-5X42-**
Square Post
42 x 5 x 5

| Species | Item Number |
|---|---|
| Rubberwood | POST-S-5X42-RW |



PRIDE INDUSTRIAL®
DECORATIVE HARDWARE
FUNCTIONAL HARDWARE
& MORE

POST COLLECTION

**POST-A-H-**
Turned Half Post
1-3/4 x 3-1/2 x 35-1/4

| Species | Item Number |
|---|---|
| Alder | POST-A-H-AL |
| Rubberwood | POST-A-H-RW |

**POST-B-H-**
Reed Half Post
1-3/4 x 3-1/2 x 35-1/4

| Species | Item Number |
|---|---|
| Rubberwood | POST-B-H-RW |

**POST-C-H-**
Rope Half Post
1-3/4 x 3-1/2 x 35-1/4

| Species | Item Number |
|---|---|
| Rubberwood | POST-C-H-RW |

**POST-G-H-**
Tuscan Half Post
3-1/2 x 1-3/4 x 35-1/4

| Species | Item Number |
|---|---|
| Rubberwood | POST-G-H-RW |

**POST-M-H-**
Mission Half Post
3-1/2 x 1-3/4 x 35-1/4

| Species | Item Number |
|---|---|
| Rubberwood | POST-M-H-RW |

**POST-A-**
Turned Post
3-1/2 x 3-1/2 x 35-1/4

| Species | Item Number |
|---|---|
| Maple | POST-A-MP |
| Rubberwood | POST-A-RW |

**Also available in 3-1/2" x 3-1/2" x 42"**
**POST-A-42-(SPECIES)**
**AL, RW**

**POST-B-**
Reed Post
3-1/2 x 3-1/2 x 35-1/4

| Species | Item Number |
|---|---|
| Maple | POST-B-MP |
| Rubberwood | POST-B-RW |

**Also available in 3-1/2" x 3-1/2" x 42"**
**POST-B-42-(SPECIES)**
**RO, RW**

**POST-C-**
Rope Post
3-1/2 x 3-1/2 x 35-1/4

| Species | Item Number |
|---|---|
| Alder | POST-C-AL |
| Rubberwood | POST-C-RW |

**Also available in 3-1/2" x 3-1/2" x 42"**
**POST-C-42-(SPECIES)**
**MP**

**POST-D-**
Tapered Fluted Post
3-3/4 x 3-3/4 x 35-1/4

| Species | Item Number |
|---|---|
| Maple | POST-D-MP |
| Rubberwood | POST-D-RW |

**Also available in 3-1/2" x 3-1/2" x 42"**
**POST-D-42-(Species)**
**RW**

**POST-E-**
Turned Post
3-3/4 x 3-3/4 x 35-1/4

| Species | Item Number |
|---|---|
| Rubberwood | POST-E-RW |

**POST-G-**
Tuscan Post
3-1/2 x 3-1/2 x 35-1/4

| Species | Item Number |
|---|---|
| Alder | POST-G-AL |
| Rubberwood | POST-G-RW |



PRIDE INDUSTRIAL®
DECORATIVE HARDWARE
FUNCTIONAL HARDWARE
& MORE

POST COLLECTION

**POST-T-**
Modern Timeless Post
3-1/2" x 3-1/2" x 35-1/2"

| Species | Item Number |
|---|---|
| Maple | POST-T-MP |
| Rubberwood | POST-T-RW |

**POST-A-5X36-**
Turned Post
5 x 5 x 36

| Species | Item Number |
|---|---|
| Alder | POST-A-5X36-AL |
| Rubberwood | POST-A-5X36-RW |

**POST-B-5X36-**
Reed Post
5 x 5 x 36

| Species | Item Number |
|---|---|
| Rubberwood | POST-B-5X36-RW |

**POST-C-5X36-**
Rope Post
5 x 5 x 36

| Species | Item Number |
|---|---|
| Rubberwood | POST-C-5X36-RW |

**POST-F-5X36-**
Acanthus Post
5 x 5 x 36

| Species | Item Number |
|---|---|
| Alder | POST-F-5X36-AL |
| Rubberwood | POST-F-5X36-RW |

**POST-G-5X36-**
Tuscan Post
5 x 5 x 36

| Species | Item Number |
|---|---|
| Alder | POST-G-5X36-AL |
| Rubberwood | POST-G-5X36-RW |

**POST-M-5X36-**
Mission Post
5 x 5 x 36

| Species | Item Number |
|---|---|
| Maple | POST-M-5X36-MP |
| Rubberwood | POST-M-5X36-RW |

**POST-A-5X42-**
Turned Post
5 x 5 x 42

| Species | Item Number |
|---|---|
| Red Oak | POST-A-5X42-RO |
| Rubberwood | POST-A-5X42-RW |

**CORBEL-M-5-**
Small Mission Corbel
4-1/2 x 5 x 10

| Species | Item Number |
|---|---|
| Rubberwood | CORBEL-M-5-RW |

**CORBEL-M-6-**
Medium Mission Corbel
5-1/4 x 7 x 14

| Species | Item Number |
|---|---|
| Rubberwood | CORBEL-M-6-RW |

**CORBEL-T-1-**
Small Traditional Corbel
4-1/2 x 5-1/4 x 10

| Species | Item Number |
|---|---|
| Alder | CORBEL-T-1-AL |
| Rubberwood | CORBEL-T-1-RW |

**CORBEL-T-2-**
Medium Traditional Corbel
5 x 7 x 14

| Species | Item Number |
|---|---|
| Rubberwood | CORBEL-T-2-RW |

**CORBEL-M-10-**
Small Modern Corbel
4 x 5 x 10

| Species | Item Number |
|---|---|
| Rubberwood | CORBEL-M-10-RW |

**CORBEL-M-11-**
Medium Modern Corbel
5 x 6-1/2 x 14

| Species | Item Number |
|---|---|
| Rubberwood | CORBEL-M-11-RW |

**CORBEL-M-1-**
Small Mission Corbel
2 x 5 x 8

| Species | Item Number |
|---|---|
| Alder | CORBEL-M-1-AL |
| Maple | CORBEL-M-1-MP |
| Rubberwood | CORBEL-M-1-RW |

**CORBEL-M-2-**
Medium Mission Corbel
3 x 9 x 12

| Species | Item Number |
|---|---|
| Alder | CORBEL-M-2-AL |
| Maple | CORBEL-M-2-MP |
| Rubberwood | CORBEL-M-2-RW |

**CORBEL-M-4-**
Narrow Mission Corbel
2-1/2 x 6-1/2 x 12

| Species | Item Number |
|---|---|
| Rubberwood | CORBEL-M-4-RW |

**CORBEL-B-**
Classic Corbel "B"
1-3/4 x 8-3/8 x 10-7/8

| Species | Item Number |
|---|---|
| Alder | CORBEL-B-AL |
| Rubberwood | CORBEL-B-RW |

**CORBEL-C-**
Tuscan Corbel "C"
1-3/4 x 8-3/8 x 10-3/4

| Species | Item Number |
|---|---|
| Rubberwood | CORBEL-C-RW |



PRIDE INDUSTRIAL®
DECORATIVE HARDWARE
FUNCTIONAL HARDWARE
& MORE

CORBEL COLLECTION

**CORBEL-D-**
Euro Bar Bracket
1-1/4 x 8 x 12

| Species | Item Number |
|---|---|
| Alder | CORBEL-D-AL |
| Maple | CORBEL-D-MP |
| Rubberwood | CORBEL-D-RW |

**TBS-**
Transition Block Short
2-3/4 x 1-7/8 x 6

| Species | Item Number |
|---|---|
| Maple | TBS-MP |
| Red Oak | TBS-RO |
| Rubberwood | TBS-RW |

**TBT-**
Transition Block Tall
2-7/8 x 1-7/8 x 9-7/8

| Species | Item Number |
|---|---|
| Alder | TBT-AL |
| Maple | TBT-MP |
| Red Oak | TBT-RO |
| Rubberwood | TBT-RW |

**CORBEL-A-4-**
Acanthus Bar Bracket
3-1/2 x 7-3/4 x 13

| Species | Item Number |
|---|---|
| Rubberwood | CORBEL-A-4-RW |

**CORBEL-M-8-**
Modern Deco Bar Bracket
2-3/4 x 8-11/16 x 12-5/8

| Species | Item Number |
|---|---|
| Rubberwood | CORBEL-M-8-RW |

**CORBEL-T-7-**
Small Modern Craft Corbel
1-3/4 x 5 x 7

| Species | Item Number |
|---|---|
| Alder | CORBEL-T-7-AL |
| Rubberwood | CORBEL-T-7-RW |

**CORBEL-T-8-**
Medium Modern Craft
1-3/4 x 7-1/4 x 9-1/4

| Species | Item Number |
|---|---|
| Alder | CORBEL-T-8-AL |
| Maple | CORBEL-T-8-MP |
| Rubberwood | CORBEL-T-8-RW |

**CORBEL-T-4-**
Traditional Bar Bracket
3-3/8 x 7-3/4 x 13

| Species | Item Number |
|---|---|
| Alder | CORBEL-T-4-AL |
| Rubberwood | CORBEL-T-4-RW |

**CORBEL-A-3-**
Large Acanthus Corbel
6-3/4 x 7-3/4 x 22

| Species | Item Number |
|---|---|
| Rubberwood | CORBEL-A-3-RW |

**CORBEL-A-2-**
Medium Acanthus Corbel
5 x 7 x 14

| Species | Item Number |
|---|---|
| Maple | CORBEL-A-2-MP |
| Rubberwood | CORBEL-A-2-RW |

**CORBEL-A-1-**
Small Acanthus Corbel
4-5/8 x 5-1/4 x 10

| Species | Item Number |
|---|---|
| Rubberwood | CORBEL-A-1-RW |

**CORBEL-BW-1-**
Basket Weave Corbel
4-1/2 x 5 x 10

| Species | Item Number |
|---|---|
| Rubberwood | CORBEL-BW-1-RW |

**CORBEL-A-5-**
Low Profile Acanthus Corbel
2-3/4 x 1-3/8 x 6

| Species | Item Number |
|---|---|
| Rubberwood | CORBEL-A-5-RW |

**CORBEL-A-6-**
Low Profile Acanthus Corbel
3-1/2 x 1-1/2 x 8

| Species | Item Number |
|---|---|
| Rubberwood | CORBEL-A-6-RW |

**CORBEL-A-7-**
Low Profile Acanthus Corbel
4-1/2 x 1-3/4 x 10

| Species | Item Number |
|---|---|
| Rubberwood | CORBEL-A-7-RW |

**CORBEL-A-9-**
Low Profile Acanthus Corbel
2-3/4 x 1-1/2 x 4-1/2

| Species | Item Number |
|---|---|
| Rubberwood | CORBEL-A-9-RW |

**CORBEL-A-10-**
Low Profile Acanthus Corbel
3-1/2 x 1-1/4 x 5-1/2

| Species | Item Number |
|---|---|
| Rubberwood | CORBEL-A-10-RW |

**CORBEL-A-11-**
Low Profile Acanthus Corbel
4-1/2 x 2 x 7

| Species | Item Number |
|---|---|
| Rubberwood | CORBEL-A-11-RW |

**ONLAY-1-M-**
Hand Carved Onlay
24 x 5 x 3/4

| Species | Item Number |
|---|---|
| Rubberwood | ONLAY-1-M-RW |

**ONLAY-2-S-**
Hand Carved Onlay
20 x 4-1/4 x 3/4

| Species | Item Number |
|---|---|
| Rubberwood | ONLAY-2-S-RW |

**ONLAY-2-M-**
Hand Carved Onlay
24 x 5 x 3/4

| Species | Item Number |
|---|---|
| Red Oak | ONLAY-2-M-RO |

**ONLAY-2-L-**
Hand Carved Onlay
36 x 7-1/2 x 7/8

| Species | Item Number |
|---|---|
| Rubberwood | ONLAY-2-L-RW |

**PED-C-**
Pedestal Foot Corner
6-1/2 x 6-1/2 x 4

| Species | Item Number |
|---|---|
| Rubberwood | PED-C-RW |

**PB-9-**
Plinth Block
3-3/4 x 7 x 1

| Species | Item Number |
|---|---|
| Rubberwood | PB-9-RW |

**PED-2-C-**
Pedestal Foot Corner
8-1/4 x 8-1/4 x 4

| Species | Item Number |
|---|---|
| Rubberwood | PED-2-C-RW |

**PED-L-**
Pedestal Foot Left
6-1/8 x 4 x 2-1/2

| Species | Item Number |
|---|---|
| Alder | PED-L-AL |
| Rubberwood | PED-L-RW |

**PED-M-**
Pedestal Foot Middle
11-1/2 x 1-3/4

| Species | Item Number |
|---|---|
| Alder | PED-M-AL |

**PED-R-**
Pedestal Foot Right
6-1/8 x 4 x 2-1/2

| Species | Item Number |
|---|---|
| Alder | PED-R-AL |
| Rubberwood | PED-R-RW |

**PED-CR-**
Rounded Pedestal Foot Corner
7 x 7 x 4

| Species | Item Number |
|---|---|
| Rubberwood | PED-CR-RW |

# BUNN FOOT COLLECTION

**BUNN-1-**
Bunn Foot
5 x 3

| Species | Item Number |
|---|---|
| Rubberwood | BUNN-1-RW |

**BUNN-2-**
Turned Bunn Foot
4 x 4

| Species | Item Number |
|---|---|
| Alder | BUNN-2-AL |
| Maple | BUNN-2-MP |
| Rubberwood | BUNN-2-RW |

**BUNN-3-**
Turned Bunn Foot
4 x 6

| Species | Item Number |
|---|---|
| Maple | BUNN-3-MP |
| Rubberwood | BUNN-3-RW |

**BUNN-6-**
Square Bunn Foot
3-7/8 x 3-7/8 x 4

| Species | Item Number |
|---|---|
| Maple | BUNN-6-MP |
| Rubberwood | BUNN-6-RW |

**BUNN-7-**
Round Bunn Foot
114mm x 103mm

| Species | Item Number |
|---|---|
| Maple | BUNN-7-MP |
| Rubberwood | BUNN-7-RW |

**BUNN-8-**
Square Bunn Foot
4 x 4 x 4

| Species | Item Number |
|---|---|
| Alder | BUNN-8-AL |
| Maple | BUNN-8-MP |
| Rubberwood | BUNN-8-RW |



PRIDE INDUSTRIAL®
DECORATIVE HARDWARE
FUNCTIONAL HARDWARE
& MORE

# LEG COLLECTION

**LEG-1-**
Carved Leg
3-1/2 x 3-1/2 x 5

| Species | Item Number |
|---|---|
| Rubberwood | LEG-1-RW |

**LEG-6-**
Queen Anne Leg
4 x 4 x 6

| Species | Item Number |
|---|---|
| Rubberwood | LEG-6-RW |

**LEG-3-**
Ball & Claw Leg
4-1/8 x 4-1/8 x 6

| Species | Item Number |
|---|---|
| Alder | LEG-3-AL |
| Rubberwood | LEG-3-RW |

**LEG-4-**
Ball & Claw Leg
4 x 4 x 8

| Species | Item Number |
|---|---|
| Rubberwood | LEG-4-RW |

# DRAWER SLIDES

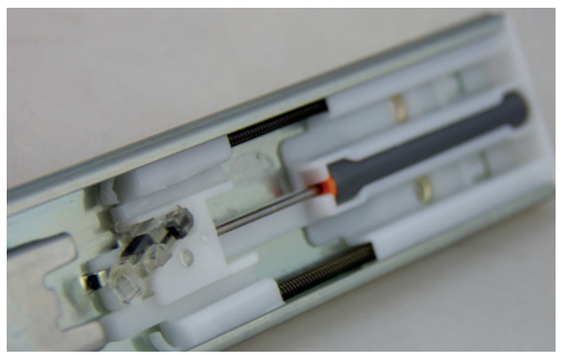

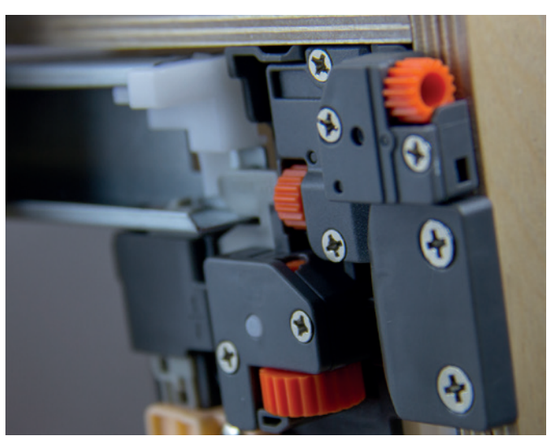

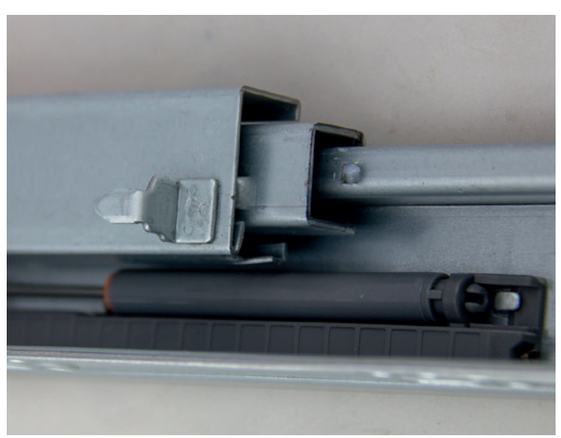





# MEGA PRO

DOUBLE WALL DRAWER BOX SYSTEM

## Double Wall Undermount Soft Close Slide

* 2-Way adjustable
* Full Extension
* Under Mounted
* Lever Disconnect
* Size: 12" ~ 22"
* Load Capacity: 100 lbs
* Material: Cold Rolled Steel
* Case: 5 Pairs

### GRAY COLOR

| ITEM NUMBER | SIZE | HEIGHT |
|---|---|---|
| 90-1288 | 300mm (12") | 88mm |
| 90-1488 | 350mm (14") | 88mm |
| 90-1688 | 400mm (16") | 88mm |
| 90-1888 | 450mm (18") | 88mm |
| 90-2088 | 500mm (20") | 88mm |
| 90-2288 | 550mm (22") | 88mm |
| 90-12126 | 300mm (12") | 126mm |
| 90-14126 | 350mm (14") | 126mm |
| 90-16126 | 400mm (16") | 126mm |
| 90-18126 | 450mm (18") | 126mm |
| 90-20126 | 500mm (20") | 126mm |
| 90-22126 | 550mm (22") | 126mm |
| 90-12172 | 300mm (12") | 172mm |
| 90-14172 | 350mm (14") | 172mm |
| 90-16172 | 400mm (16") | 172mm |
| 90-18172 | 450mm (18") | 172mm |
| 90-20172 | 500mm (20") | 172mm |
| 90-22172 | 550mm (22") | 172mm |
| 90-12238 | 300mm (12") | 238mm |
| 90-14238 | 350mm (14") | 238mm |
| 90-16238 | 400mm (16") | 238mm |
| 90-18238 | 450mm (18") | 238mm |
| 90-20238 | 500mm (20") | 238mm |
| 90-22238 | 550mm (22") | 238mm |

### GALLERY RAILS

| | |
|---|---|
| 90-SIDERAIL12 | 300mm (12") |
| 90-SIDERAIL14 | 350mm (14") |
| 90-SIDERAIL16 | 400mm (16") |
| 90-SIDERAIL18 | 450mm (18") |
| 90-SIDERAIL20 | 500mm (20") |
| 90-SIDERAIL22 | 550mm (22") |

## WHITE COLOR

| ITEM NUMBER | SIZE | HEIGHT | |
|---|---|---|---|
| 90-1288W | 300mm (12") | 88mm | Special Order |
| 90-1488W | 350mm (14") | 88mm | |
| 90-1688W | 400mm (16") | 88mm | |
| 90-1888W | 450mm (18") | 88mm | |
| 90-2088W | 500mm (20") | 88mm | |
| 90-2288W | 550mm (22") | 88mm | |
| 90-12126W | 300mm (12") | 126mm | Special Order |
| 90-14126W | 350mm (14") | 126mm | |
| 90-16126W | 400mm (16") | 126mm | |
| 90-18126W | 450mm (18") | 126mm | |
| 90-20126W | 500mm (20") | 126mm | |
| 90-22126W | 550mm (22") | 126mm | |
| 90-12172W | 300mm (12") | 172mm | Special Order |
| 90-14172W | 350mm (14") | 172mm | |
| 90-16172W | 400mm (16") | 172mm | |
| 90-18172W | 450mm (18") | 172mm | |
| 90-20172W | 500mm (20") | 172mm | |
| 90-22172W | 550mm (22") | 172mm | |
| 90-12238W | 300mm (12") | 238mm | Special Order |
| 90-14238W | 350mm (14") | 238mm | |
| 90-16238W | 400mm (16") | 238mm | |
| 90-18238W | 450mm (18") | 238mm | |
| 90-20238W | 500mm (20") | 238mm | |
| 90-22238W | 550mm (22") | 238mm | |

## GALLERY RAILS

| | | |
|---|---|---|
| 90-SIDERAIL12W | 300mm (12") | Special Order |
| 90-SIDERAIL14W | 350mm (14") | Special Order |
| 90-SIDERAIL16W | 400mm (16") | Special Order |
| 90-SIDERAIL18W | 450mm (18") | Special Order |
| 90-SIDERAIL20W | 500mm (20") | Special Order |
| 90-SIDERAIL22W | 550mm (22") | Special Order |

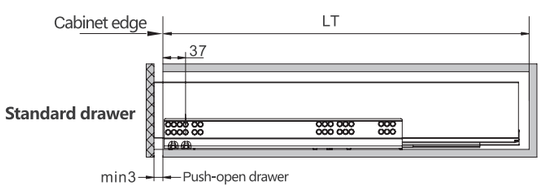


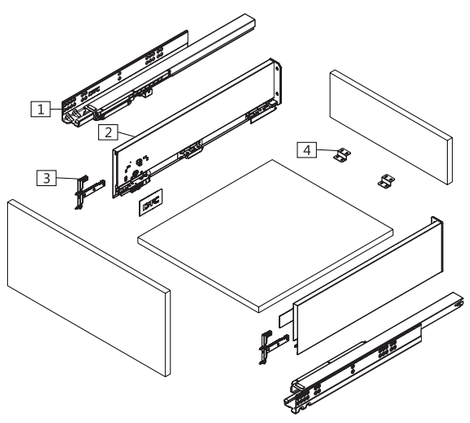


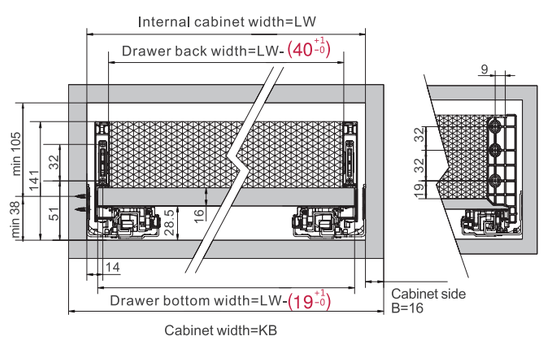




PRIDE INDUSTRIAL®
DECORATIVE HARDWARE
FUNCTIONAL HARDWARE
& MORE

# SYNC PRO

NEW PRODUCT

SYNCHRONIZED UNDERMOUNTS 6X

## Elevate Your Drawer Experience with Precision and Smooth Performance

* Experience smoother and softer drawer operation.
* Enhanced stability with a synchronous sliding system.
* More accurate tool-free adjustment for drawer panel
* Height adjustment: 0~+3mm
* Side adjustment: +-2mm
* Depth adjustment with self-adapting feature: 0 to +6mm (For Inset Application)
* **Dynamic load capacity: 120lbs, 50000 cycles**

Also available for ¾ material

| Item Number | Item Number |
|---|---|
| 61SF12 | 61SF3412 |
| 61SF15 | 61SF3415 |
| 61SF18 | 61SF3418 |
| 61SF21 | 61SF3421 |
| 61SF24 | 61SF3424 |

61SFCLIPS INCLUDED

9810BRKT

## Outside Drawer Width

| | | |
|---|---|---|
| Drawer side Thickness | 5/8" (16mm) | 1/2" (13mm) |
| Inside Cabinet Width Deduction | 3/8" (10mm) | 5/8" (16mm) |

7800-BRKT

9800BRKT

**Standard drawer**

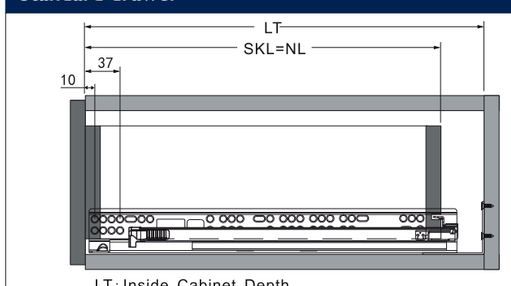


LT: Inside Cabinet Depth

**Rear mounting bracket**

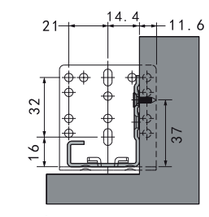


A:

Steel rear mounting bracket

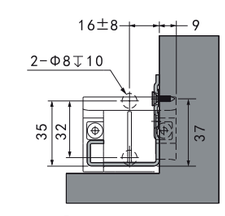


B:

Plastic rear mounting bracket

## Slide installation

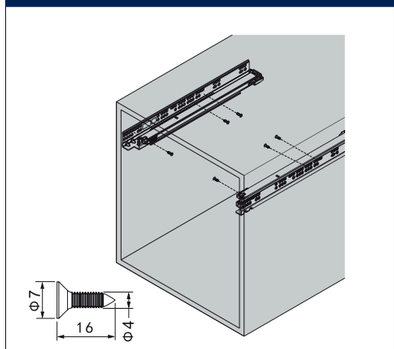


## Drawer back preparation, 3D Locking device installation

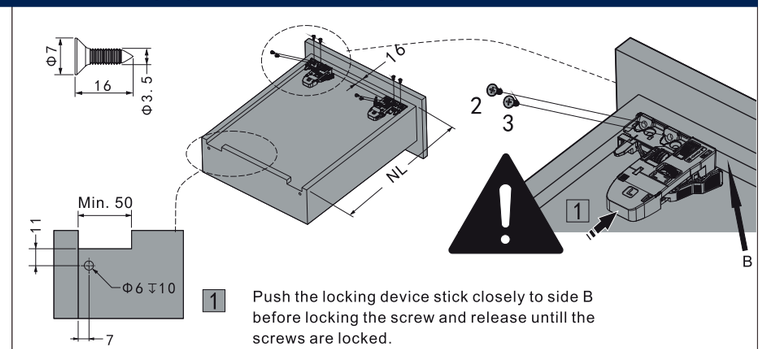


1 Push the locking device stick closely to side B before locking the screw and release untill the screws are locked.

## Drawer installation

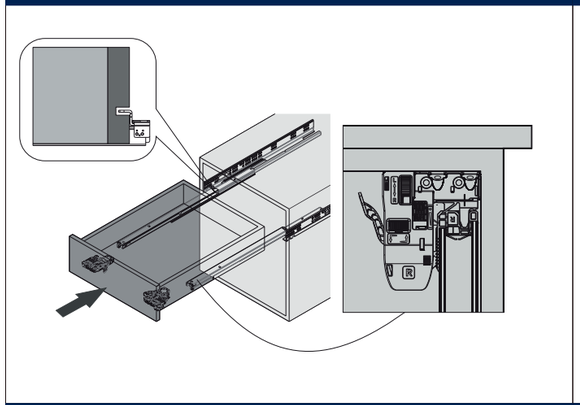

## Removal of the drawer

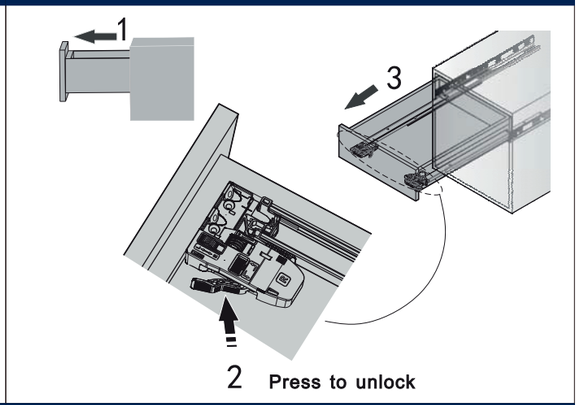


## Side adjustment

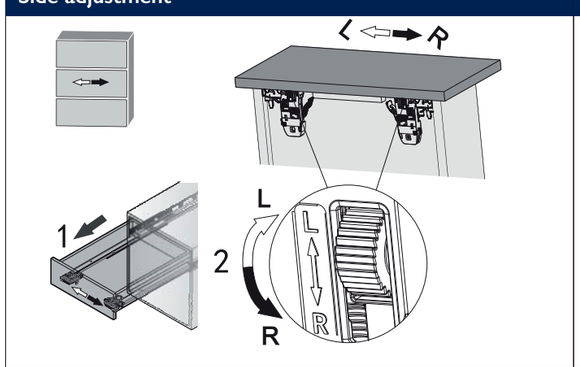


## Height adjustment

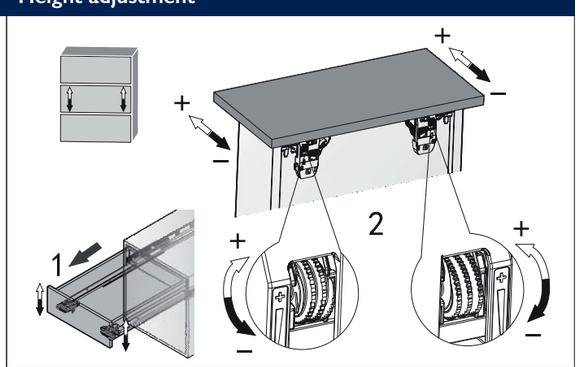


## Depth adjustment with self-adaption

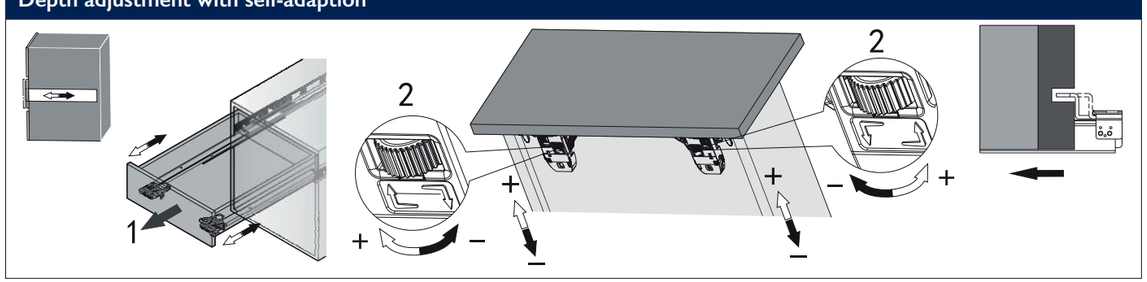




PRIDE INDUSTRIAL®
DECORATIVE HARDWARE
FUNCTIONAL HARDWARE
& MORE

# PERFORM MAX 6X

(9903 Series)

SOFT-CLOSE UNDERMOUNT SLIDE

## Heavy Duty Undermount Soft Close Slide With 3D Locking Device

* 6-Way Adjustable
* Full Extension
* Under Mounted
* Size: 18" ~ 30"
* Load Capacity: 140 lbs

**ITEM NUMBER**

990318SOFT (6 Pairs)
990321SOFT (6 Pairs)
990324SOFT (3 Pairs)
990327SOFT (3 Pairs)
990330SOFT (3 Pairs)
9903CLIPS
9903BRKTM

9880-CLIPS
INCLUDED

LW= Internal Cabinet Width

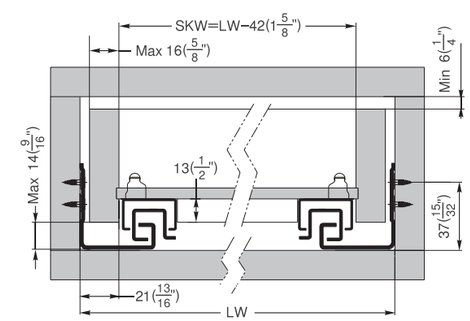


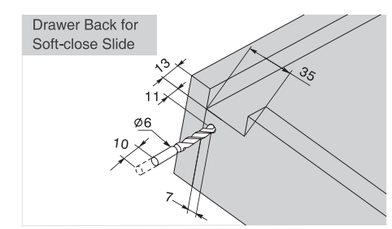


| Drawer length | Runner length | Internal Cabinet Depth | |
|---|---|---|---|
| | | Max | Min |
| 457(18") | 470(18 1/2") | 522(20 9/16") | 479(18 7/8") |
| 533(21") | 546(21 1/2") | 598(23 9/16") | 555(21 7/8") |
| 610(24") | 465(18 3/10") | —— | 634(24 31/32") |
| 686(27") | 505(19 9/10") | —— | 709(27 29/32") |
| 762(30") | 595(23 2/5") | —— | 786(30 15/16") |

PRIDE INDUSTRIAL®
DECORATIVE HARDWARE
FUNCTIONAL HARDWARE
& MORE

# PERFORM PRO 6X

(9880 Series)

SOFT-CLOSE UNDERMOUNT SLIDE

## Soft Close Undermount Slide with 3-D Locking Device

* 6-Way adjustable
* Full Extension
* Under Mounted
* Lever Disconnect

* Size: 9″ ~ 21″
* Load Capacity: 100 lbs
* Material: Cold Rolled Steel
* Case: 6 Pairs

**ITEM NUMBER**
98809SOFT
988012SOFT
988015SOFT
988018SOFT
988020SOFT
988021SOFT
9880CLIPS
xBRKT
9810BRKT

9800BRKT

9810BRKT

9880CLIPS
INCLUDED

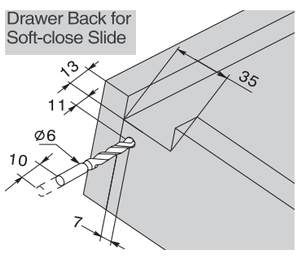


Installation for drawers between 12.7mm-16mm thick drawer sides

IDW= Internal Drawer Width
ICW= Internal Cabinet Width

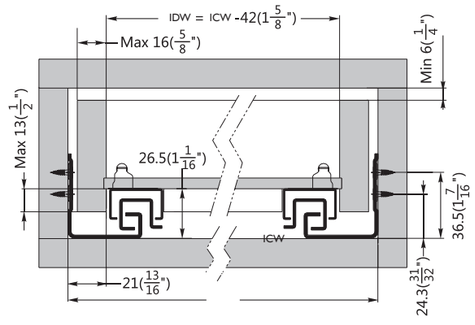


| Drawer length | Runner length | Internal Cabinet Depth | |
|---|---|---|---|
| | | Max | Min |
| (12") | 317(12 1/2") | 369(14 9/16") | 326(12 7/8") |
| (15") | 394(15 1/2") | 446(17 9/16") | 403(15 7/8") |
| (18") | 470(18 1/2") | 522(20 9/16") | 479(18 7/8") |
| (21") | 546(21 1/2") | 598(23 9/16") | 555(21 7/8") |

### Outside Drawer Width

| | | |
|---|---|---|
| Drawer side Thickness | 5/8″ (16mm) | 1/2″ (13mm) |
| Inside Cabinet Width Deduction | 3/8″ (10mm) | 5/8″ (16mm) |



# PERFORM PRO 3/4 6X

SLIDES

(8834 Series)

SOFT-CLOSE UNDERMOUNT SLIDE

## Soft Close Undermount Slide with 3-D Locking Device

Used for 3/4″ material

* 6-Way adjustable
* Full Extension
* Under Mounted
* Lever Disconnect
* Size: 9″ ~ 21″

* Load Capacity: 100 lbs
* Material: Cold Rolled Steel
* Case: 6 Pairs
* Available as Special Order

**ITEM NUMBER**
8834-12-SOFT
8834-15-SOFT
8834-18-SOFT
8834-21-SOFT
9880CLIPS
9800BRKT
9810BRKT

9800BRKT

9810BRKT

9880CLIPS
INCLUDED

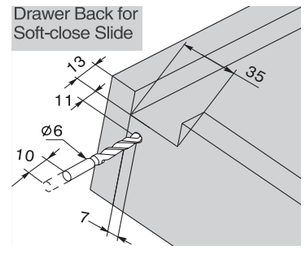


Installation Dimentions (mm)

LW= Internal Cabinet Width

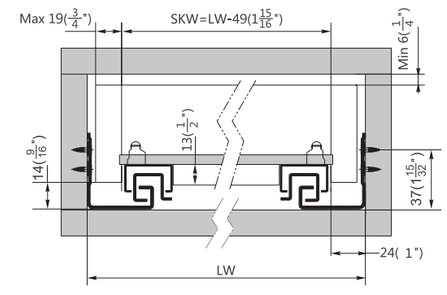


| Drawer length | Runner length | Internal Cabinet Depth | |
|---|---|---|---|
| | | Max | Min |
| 229(9") | 256(10") | 298(11 3/4") | 283(11 1/8") |
| 305(12") | 317(12 1/2") | 369(14 9/16") | 326(12 7/8") |
| 381(15") | 394(15 1/2") | 446(17 9/16") | 403(15 7/8") |
| 457(18") | 470(18 1/2") | 522(20 9/16") | 479(18 7/8") |
| 533(21") | 546(21 1/2") | 598(23 9/16") | 555(21 7/8") |

### Outside Drawer Width

| | |
|---|---|
| Drawer side Thickness | 3/4″ (19mm) |
| Inside Cabinet Width Deduction | 7/16″ (11mm) |

PRIDE INDUSTRIAL®
DECORATIVE HARDWARE
FUNCTIONAL HARDWARE
& MORE

# PERFORM PRO 2X

(9800 Series)

SOFT-CLOSE UNDERMOUNT SLIDE

## Soft Close Concealed Undermount with height adjustment locking device

* 2-Way adjustable
* Full Extension
* Under Mounted
* Lever Disconnect
* Size: 12" ~ 21"
* Load Capacity: 90 lbs
* Material: Cold Rolled Steel
* Case: 6 Pairs

**ITEM NUMBER**
980012SOFT
980015SOFT
980018SOFT
980021SOFT
9800CLIPS
9800BRKT
9810BRKT

9800BRKT

9810BRKT

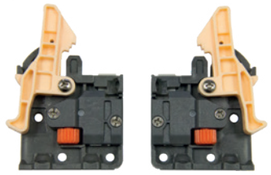

9800CLIPS
INCLUDED

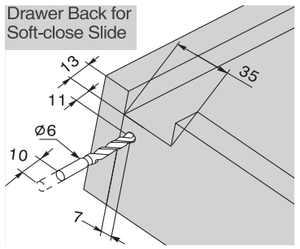


Installation for drawers between 12.7mm-16mm thick drawer sides

IDW= Internal Drawer Width
ICW= Internal Cabinet Width

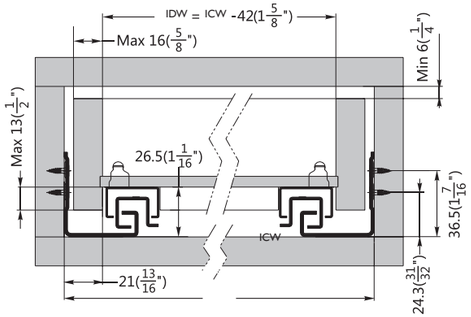


| Drawer length | Runner length | Internal Cabinet Depth | |
|---|---|---|---|
| | | Max | Min |
| (12") | 317(12 1/2") | 369(14 9/16") | 326(12 7/8") |
| (15") | 394(15 1/2") | 446(17 9/16") | 403(15 7/8") |
| (18") | 470(18 1/2") | 522(20 9/16") | 479(18 7/8") |
| (21") | 546(21 1/2") | 598(23 9/16") | 555(21 7/8") |

### Outside Drawer Width

| | | |
|---|---|---|
| Drawer side Thickness | 5/8" (16mm) | 1/2" (13mm) |
| Inside Cabinet Width Deduction | 3/8" (10mm) | 5/8" (16mm) |



# PERFORM PRO 3/4 2X

SLIDES

(8034 Series)

SOFT-CLOSE UNDERMOUNT SLIDE

## Soft Close Concealed Undermount with height adjustment locking device

Used for 3/4" material

* 2-Way adjustable
* Full Extension
* Under Mounted
* Lever Disconnect
* Size: 12" ~ 21"
* Load Capacity: 90 lbs
* Material: Cold Rolled Steel
* Case: 6 Pairs

**ITEM NUMBER**
8034-12-SOFT
8034-15-SOFT
8034-18-SOFT
8034-21-SOFT
9800CLIPS
9800BRKT
9810BRKT

9800BRKT

9810BRKT

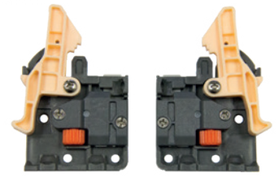

9800CLIPS
INCLUDED

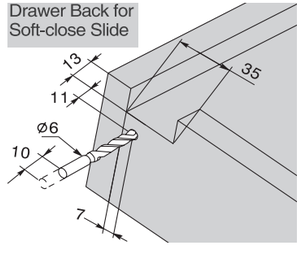


Installation for drawers between 12.7mm-16mm thick drawer sides

IDW= Internal Drawer Width
ICW= Internal Cabinet Width

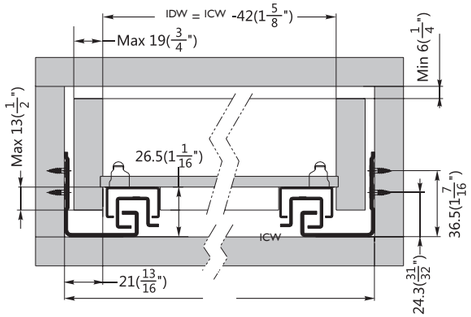


| Drawer length | Runner length | Internal Cabinet Depth | |
|---|---|---|---|
| | | Max | Min |
| (12") | 317(12 1/2") | 369(14 9/16") | 326(12 7/8") |
| (15") | 394(15 1/2") | 446(17 9/16") | 403(15 7/8") |
| (18") | 470(18 1/2") | 522(20 9/16") | 479(18 7/8") |
| (21") | 546(21 1/2") | 598(23 9/16") | 555(21 7/8") |

### Outside Drawer Width

| | |
|---|---|
| Drawer side Thickness | 3/4" (19mm) |
| Inside Cabinet Width Deduction | 7/16" (11mm) |

PRIDE INDUSTRIAL®
DECORATIVE HARDWARE
FUNCTIONAL HARDWARE
& MORE

# FORTE PRO 6X

(8500 Series)

SOFT-CLOSE UNDERMOUNT SLIDE

## Soft Close Undermount Slide with 3-D Locking Device

* 6-Way Adj Drawer release clips (included)
* Size: 12" ~ 21"
* Full Extension-Soft Close
* Face Frame Back Bracket (optional)
* Load Capacity: 100 lbs
* Case: 6 Pairs
* Material: Cold Rolled Steel

| ITEM NUMBER | |
|---|---|
| 8500-12-SOFT | (6 pairs/case) |
| 8500-15-SOFT | (6 pairs/case) |
| 8500-18-SOFT | (6 pairs/case) |
| 8500-21-SOFT | (6 pairs/case) |
| 9800-BRKT | (100 pairs) |
| 8500-CLIPS | (50 pairs) |
| 8500-NARWCLIP | (100 pairs) |

8500-NARWCLIP

9800-BRKT

8500-CLIPS
INCLUDED

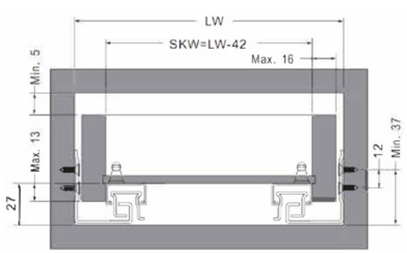


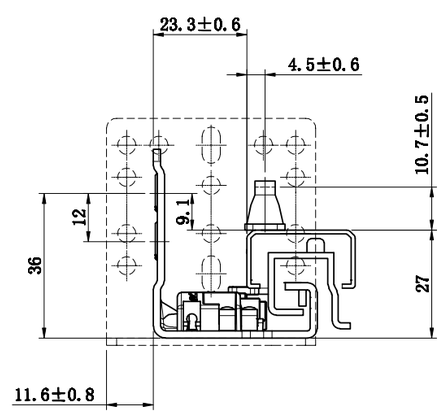


### Outside Drawer Width

| | | |
|---|---|---|
| Drawer side Thickness | 5/8" (16mm) | 1/2" (13mm) |
| Inside Cabinet Width Deduction | 3/8" (10mm) | 5/8" (16mm) |



# FORTE PRO 3/4 6X

SLIDES

(8534 Series)

SOFT-CLOSE UNDERMOUNT SLIDE

## Soft Close Undermount Slide with 3-D Locking Device

Used for 3/4" material

* 6-Way Adj Drawer release clips (included)
* Size: 12" ~ 21"
* Full Extension-Soft Close
* Face Frame Back Bracket (optional)
* Load Capacity: 100 lbs
* Case: 6 Pairs
* Material: Cold Rolled Steel

| ITEM NUMBER | |
|---|---|
| 8534-15-SOFT | (6 pairs/case) |
| 8534-18-SOFT | (6 pairs/case) |
| 8534-21-SOFT | (6 pairs/case) |
| 9800-BRKT | (100 pairs) |
| 8500-CLIPS | (50 pairs) |
| 8500-NARWCLIP | (100 pairs) |

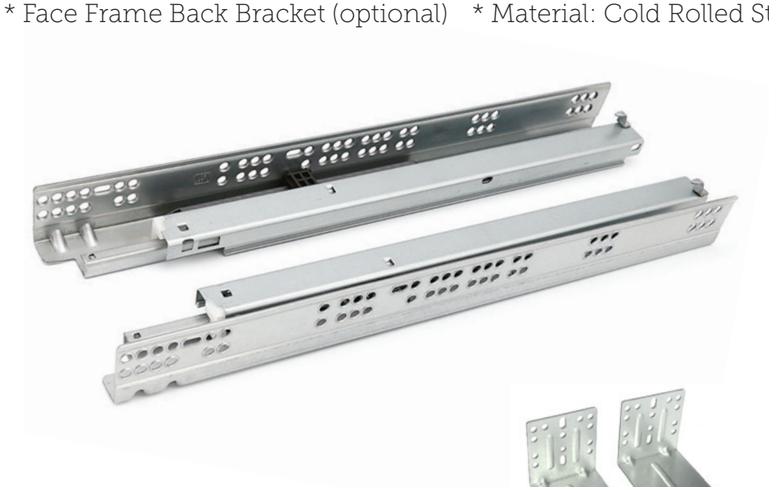

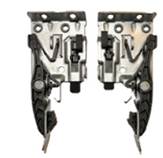

8500-NARWCLIP

9800-BRKT

8500-CLIPS
INCLUDED

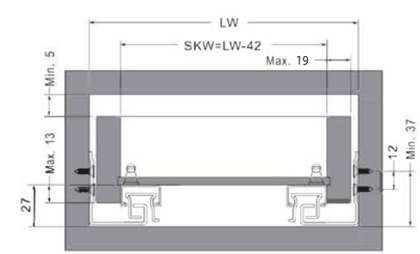


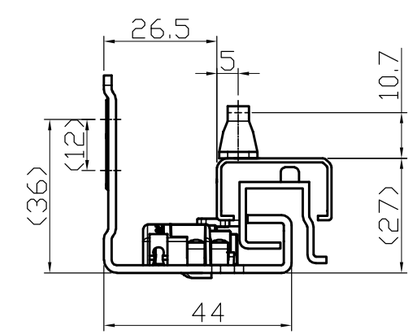


19mm Wood thickness

### Outside Drawer Width

| | |
|---|---|
| Drawer side Thickness | 3/4" (19mm) |
| Inside Cabinet Width Deduction | 7/16" (11mm) |

PRIDE INDUSTRIAL®
DECORATIVE HARDWARE
FUNCTIONAL HARDWARE
& MORE

# ADVANTAGE PRO

(7800 Series)

SOFT-CLOSE UNDERMOUNT SLIDE

## Soft Close Undermount Slide with locking device and rear brackets

* 2-Way adjustable
* Rear metal bracket included
* Under Mounted
* Lever Disconnect

* Size: 12" ~ 21"
* Load Capacity: 75 lbs
* Material: Cold Rolled Steel
* Case: 6 Pairs

**ITEM NUMBER**
7800-12-SOFT
7800-15-SOFT
7800-CLIPS (100 PAIRS)
7800-BRKT (200 PCS)
7800-EUBRKT (200 PCS)

7800-CLIPS
INCLUDED

7800-BRKT
INCLUDED

7800-EUBRKT
OPTIONAL
FRAMELESS APPLICATION
REAR BRACKET

### Outside Drawer Width

| | | |
|---|---|---|
| Drawer side Thickness | 5/8" (16mm) | 1/2" (13mm) |
| Inside Cabinet Width Deduction | 3/8" (10mm) | 5/8" (16mm) |

NL = Nominal Slide Length LT = Internal cabinet Depth

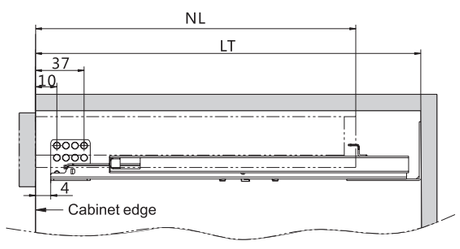


SKW = Internal Drawer Width LW = Internal Cabinet Width

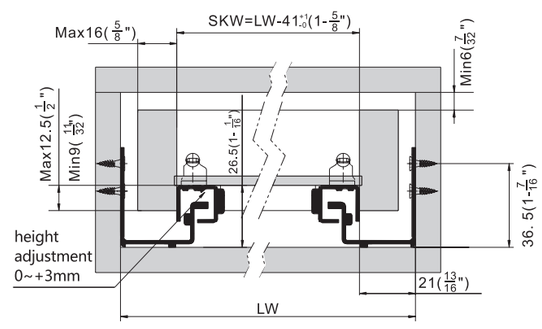




# SOFT PRO X

SLIDES

(4903 Series)

SOFT-CLOSE SIDE MOUNT SLIDE

## Soft Close Ballbearing Slide

* Full Extension
* Side Mounted
* 46mm Height
* Soft Close
* 12.7mm Side Clearance
* Case: 10 Pairs

* Finish: Zinc
* Lever Disconnect
* Size: 10" ~ 28"
* Load Capacity: 100 lbs
* Material: Cold Rolled Steel

**ITEM NUMBER**
4903-10-ZP
4903-12-ZP
4903-14-ZP
4903-16-ZP
4903-18-ZP
4903-20-ZP
4903-22-ZP
4903-24-ZP
4903-26-ZP
4903-28-ZP
4903-BRKT (200 PCS)
4903-SKT (250 PAIRS)
4903-BRKTPI (100 PCS)
4903-BRKTSO (100 PCS)

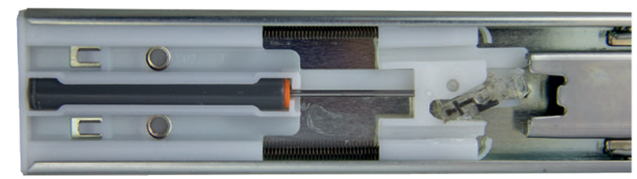

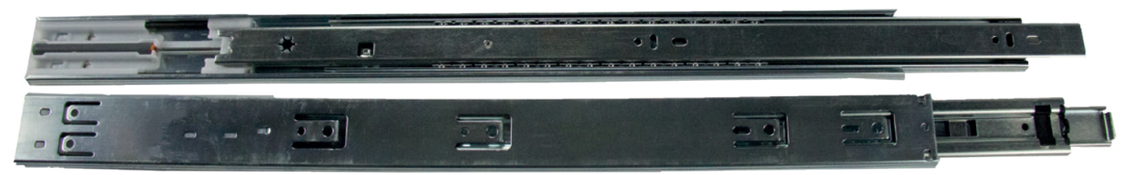

4903-BRKT

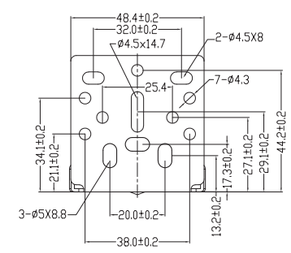


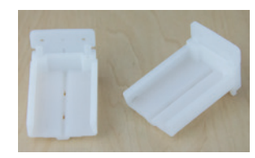

4903-SKT
Adjustable rear plastic socket

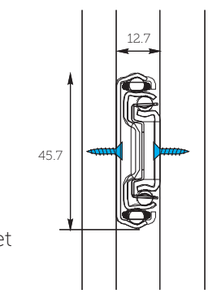


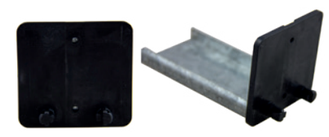

4903-BRKTPI
Plug In Rear Adjustable Socket

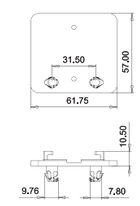


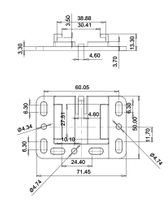

4903-BRKTSO
Screw On Rear Adjustable Socket

PRIDE INDUSTRIAL®
DECORATIVE HARDWARE
FUNCTIONAL HARDWARE
& MORE

# 4600

## STANDARD BALL BEARING SLIDE

* Full Extension
* Side Mounted
* 46mm Height
* Flat Sided Profile
* 12.7mm Side Clearance
* Case: 10 Pairs

* Finish: Zinc or Black
* Lever Disconnect
* Size: 10" ~ 28"
* Load Capacity: 100 lbs
* Material: Cold Rolled Steel
* OT = 1.5" Over Travel

**ITEM NUMBER BK**
4600-10-BK
4600-12-BK
4600-14-BK
4600-14-BKOT
4600-16-BK
4600-16-BKOT
4600-18-BK
4600-20-BK
4600-20-BKOT
4600-22-BK
4600-24-BK
4600-26-BK
4600-28-BK

**ITEM NUMBER ZP**
4600-10-ZPOT
4600-12-ZP
4600-12-ZPOT
4600-14-ZPOT
4600-16-ZPOT
4600-18-ZPOT
4600-20-ZPOT
4600-22-ZPOT
4600-24-ZPOT
4600-26-ZPOT
4600-28-ZPOT
4600-BRKT (100 PCS)
4600-BRKTPI (100 PCS)
4600-BRKTSO (100 PCS)

4600-BRKT

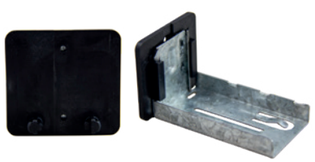

4600-BRKTPI
Plug In Rear Adjustable Socket

4600-BRKTSO
Screw On Rear Adjustable Socket

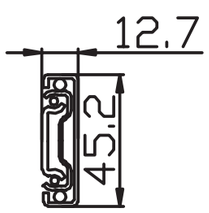


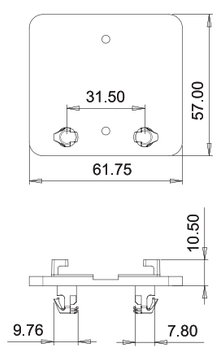


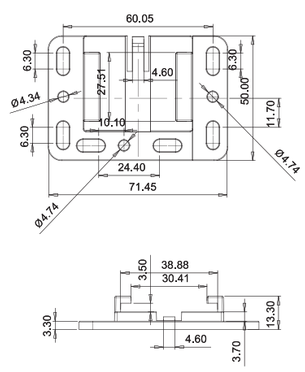




# 4800

SLIDES

## STANDARD BALL BEARING SLIDE

* Full Extension
* Side Mounted
* 46mm Height
* Round Sided Profile
* 12.7mm Side Clearance
* Case: 10 Pairs

* Finish: Zinc
* Lever Disconnect
* Size: 8" ~ 28"
* Load Capacity: 100 lbs
* Material: Cold Rolled Steel
* OT = 1.5" Over Travel

**ITEM NUMBER**
4800-8-ZP
4800-10-ZP
4800-12-ZP
4800-14-ZPOT
4800-16-ZPOT
4800-18-ZPOT
4800-20-ZPOT
4800-22-ZPOT
4800-24-ZPOT
4800-26-ZPOT
4800-28-ZPOT
4800-BRKT (100 PCS)
4800-BRKTPI (100 PCS)
4800-BRKTPI10 (100 PCS)
4800-BRKTSO (100 PCS)

4800-BRKT

Optional Plastic Rear Socket

4903-SKT

**PRODUCTION PACK OPTIONS**
4800-14-ZPOT-CM
4800-14-ZPOT-DM
4800-16-ZPOT-CM
4800-16-ZPOT-DM
4800-18-ZPOT-CM
4800-18-ZPOT-DM
4800-20-ZPOT-CM
4800-20-ZPOT-DM
4800-22-ZPOT-CM
4800-22-ZPOT-DM
*40 pieces per case

**ITEM NUMBER BK**
4800-10-BK
4800-12-BK
4800-14-BK
4800-16-BK
4800-18-BK
4800-20-BK
4800-22-BK
4800-24-BK

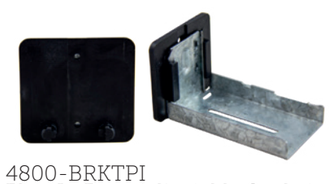

4800-BRKTPI
Plug In Rear Adjustable Socket

4800-BRKTPI10
Plug In Rear Adjustable Socket for 4800 Slide
10mm Dowel

4800-BRKTSO
Screw On Rear Adjustable Socket

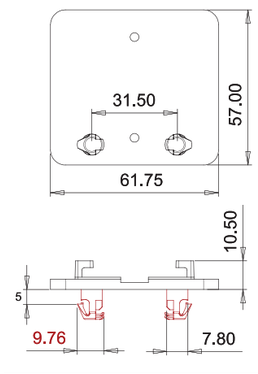


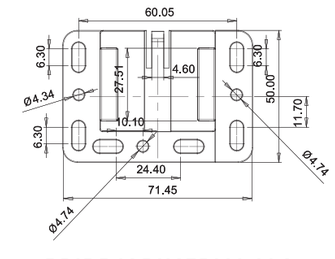


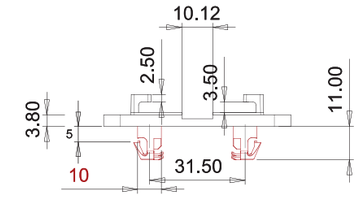

PRIDE INDUSTRIAL®
DECORATIVE HARDWARE
FUNCTIONAL HARDWARE
& MORE

# 5890

## HEAVY DUTY BALL BEARING SLIDE

* Full Extension
* Side Mounted
* 58mm Height
* Round Sided Profile
* 19mm Side Clearance
* Case: 5 Pairs

* Finish: Zinc
* Lever Disconnect
* Size: 10" ~ 36"
* Load Capacity: 250 lbs
* Material: Cold Rolled Steel

**ITEM NUMBER**
5890-10-ZP
5890-12-ZP-2
5890-14-ZP-2
5890-16-ZP-2
5890-18-ZP-2
5890-20-ZP-2
5890-22-ZP-2
5890-24-ZP-2
5890-26-ZP-2
5890-28-ZP-2
5890-30-ZP-2
5890-32-ZP-2
5890-34-ZP-2
5890-36-ZP-2

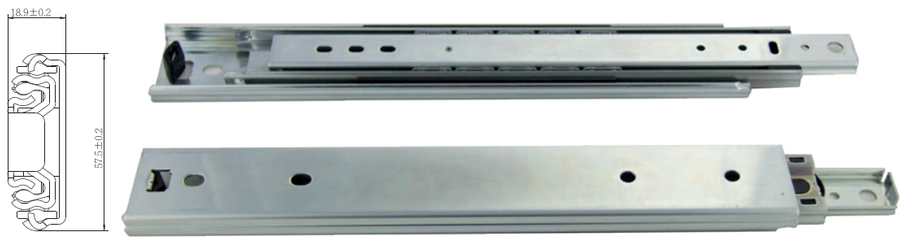


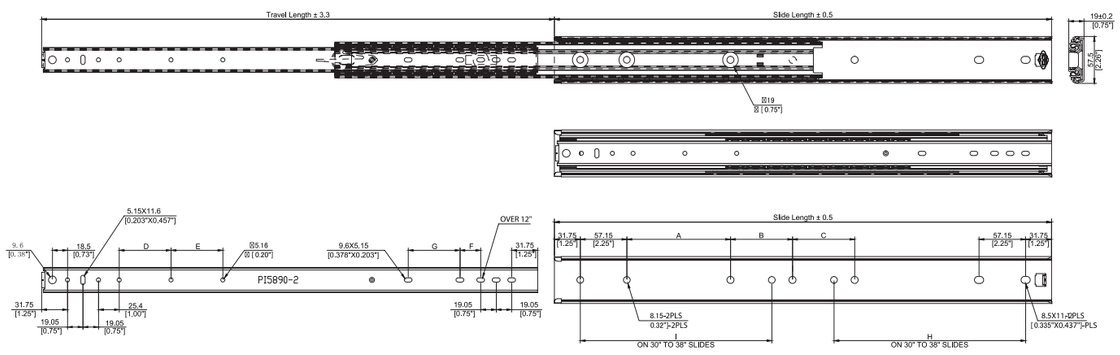


| Part Number | Slide Length | Travel Length | A | B | C | D | E | F | G | H | I |
|---|---|---|---|---|---|---|---|---|---|---|---|
| PI5890-10" | 254mm [10]" | 254mm [10]" | - | - | - | - | - | - | - | - | - |
| PI5890-12" | 304.8mm [12]" | 323.85mm [12.75]" | - | - | - | - | - | - | - | - | - |
| PI5890-14" | 355.6mm [14]" | 374.65mm [14.75]" | - | - | - | - | - | - | - | - | - |
| PI5890-16" | 406.4mm [16]" | 425.45mm [16.75]" | - | - | - | 63.5 [2.5"] | 63.5 [2.5"] | 25.4 [1"] | - | - | - |
| PI5890-18" | 457.2mm [18]" | 476.25mm [18.75]" | - | - | - | 63.5 [2.5"] | 63.5 [2.5"] | 25.4 [1"] | 63.5 [2.5"] | - | - |
| PI5890-20" | 508mm [20]" | 527.05mm [20.75]" | - | - | - | 63.5 [2.5"] | 63.5 [2.5"] | 25.4 [1"] | 63.5 [2.5"] | - | - |
| PI5890-22" | 558.8mm [22]" | 577.85mm [22.75]" | 127 [5"] | 76.2 [3"] | 76.2 [3"] | 63.5 [2.5"] | 63.5 [2.5"] | 25.4 [1"] | 63.5 [2.5"] | - | - |
| PI5890-24" | 609.6mm [24]" | 628.65mm [24.75]" | 127 [5"] | 76.2 [3"] | 76.2 [3"] | 63.5 [2.5"] | 63.5 [2.5"] | 25.4 [1"] | 63.5 [2.5"] | - | - |
| PI5890-26" | 660.4mm [26]" | 679.45mm [26.75]" | 127 [5"] | 76.2 [3"] | 76.2 [3"] | 63.5 [2.5"] | 63.5 [2.5"] | 25.4 [1"] | 63.5 [2.5"] | - | - |
| PI5890-28" | 711.2mm [28]" | 730.25mm [28.75]" | 127 [5"] | 76.2 [3"] | 76.2 [3"] | 63.5 [2.5"] | 63.5 [2.5"] | 25.4 [1"] | 63.5 [2.5"] | - | - |
| PI5890-30" | 762mm [30]" | 781.05mm [30.75]" | - | - | - | 63.5 [2.5"] | 63.5 [2.5"] | 25.4 [1"] | 63.5 [2.5"] | 234.95 [9.25"] | 234.95 [9.25"] |
| PI5890-32" | 812.8mm [32]" | 831.85mm [32.75]" | - | - | - | 63.5 [2.5"] | 63.5 [2.5"] | 25.4 [1"] | 63.5 [2.5"] | 234.95 [9.25"] | 234.95 [9.25"] |
| PI5890-34" | 863.6mm [34]" | 882.65mm [34.75]" | - | - | - | 63.5 [2.5"] | 63.5 [2.5"] | 25.4 [1"] | 63.5 [2.5"] | 234.95 [9.25"] | 234.95 [9.25"] |
| PI5890-36" | 914.4mm [36]" | 933.45mm [36.75]" | - | - | - | 63.5 [2.5"] | 63.5 [2.5"] | 25.4 [1"] | 63.5 [2.5"] | 234.95 [9.25"] | 234.95 [9.25"] |





## Model: # 5000 Progressive Ball Bearing Slide

* Full Extension
* Side Mounted
* 12.7mm Side Clearance
* Material: Cold Rolled Steel
* Case: 10 Pairs

* Finish: Zinc or Black
* Lever Disconnect
* Size: 12" ~ 28"
* Load Capacity: 150 lbs
* OT = 1.5" Over Travel

**ITEM NUMBER**
5000-12-ZPOT
5000-14-ZPOT
5000-16-BKOT
5000-16-ZPOT
5000-18-BKOT
5000-18-ZPOT
5000-20-BKOT
5000-20-ZPOT
5000-22-ZPOT
5000-24-ZPOT
5000-26-ZPOT
5000-28-ZPOT

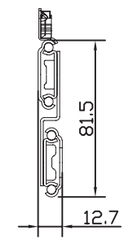

## Model: # 3500 Low Profile Ball Bearing Slide

* Full Extension
* Side Mounted
* 35mm Height
* Round Sided Profile
* 12.7mm Side Clearance
* Case: 10 Pairs
* Finish: Zinc or Black
* Lever Disconnect
* Size: 12" ~ 24"
* Load Capacity: 75 lbs
* Material: Cold Rolled Steel
* OT = 1." Over Travel

**ITEM NUMBER**
3500-12-ZP
3500-14-ZP
3500-16-ZPOT
3500-18-ZP
3500-20-ZP
3500-20-ZPOT
3500-22-ZP
3500-24-ZP
3500-BRKT (200 PCS)

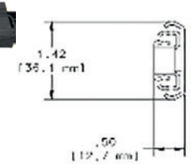

3500-BRKT

## Model: # 3000 Keyboard Slide

* Top Mount Fixed Brackets
* Plastic Protective Cover
* Detent In & Detent Out
* Material: Cold Rolled Steel
* Case: 10 Pairs
* Finish: Zinc or Black
* Size: 16"
* Load Capacity: 60 lbs

**ITEM NUMBER**
3000-16-BK
3000-16-ZP

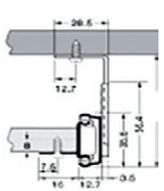

## Model: # 4000 Standard Euro Slide

* 3/4 Extension
* Double Stopper
* One Side Captive
* 32mm System
* Material: Cold Rolled Steel
* Finish: Epoxy Powder Coat
* Size: 10" ~ 24"
* Load Capacity: 75 lbs
* Option - Soft Roller
* Option - Rear Sockets

**ITEM NUMBER**
4000-10-1WT
4000-12-1WT
4000-14-1WT
4000-16-1WT
4000-18-1WT
4000-20-1WT
4000-22-1WT
4000-24-1WT

14" to 22" also available:
4000-(SIZE)-WT-CL
4000-(SIZE)-WT-CR
4000-(SIZE)-WT-DL
4000-(SIZE)-WT-DR

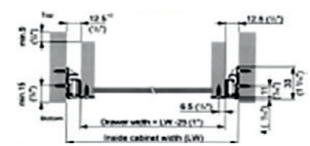

**Packaging**

| | |
|---|---|
| Set Pack: | 25 pairs |
| Bulk: | 100 pieces |
| | CL/CR/DL/DR |

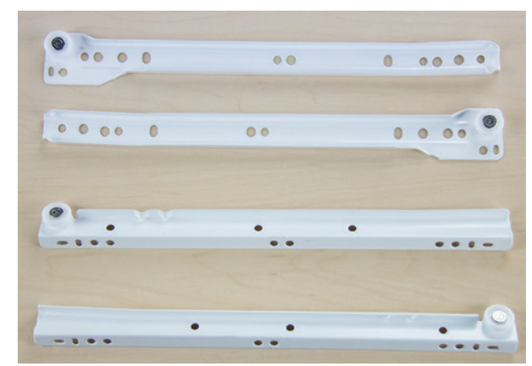

## Model: # 4200 Crimp-On Euro Slide

* 3/4 Extension
* Double Stopper
* One Side Captive
* 32mm System
* (CL:CR:DL:DR: 100 pieces per case)
* Finish: Epoxy Powder Coat
* Material: Cold Rolled Steel
* Load Capacity: 75 lbs

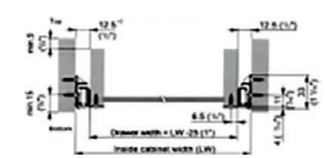

| | ITEM NUMBER | |
|---|---|---|
| 20" | 4200-20-WT-CL | Cabinet Left |
| | 4200-20-WT-CR | Cabinet Right |
| | 4200-20-WT-DL | Drawer Left |
| | 4200-20-WT-DR | Drawer Right |
| 22" | **ITEM NUMBER** | |
| | 4200-22-WT-CL | Cabinet Left |
| | 4200-22-WT-CR | Cabinet Right |
| | 4200-22-WT-DL | Drawer Left |
| | 4200-22-WT-DR | Drawer Right |

## EUSKT # 1

3-1/2" Rear Bracket for Euro Slides

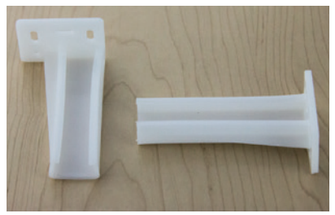

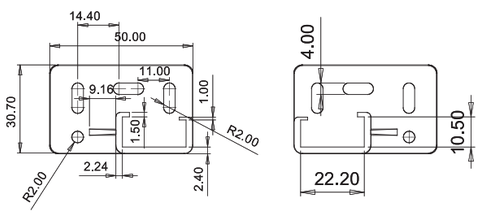


EUSKT-1-L LEFT
EUSKT-1-R RIGHT
CASE: 500 pieces per box

## EUSKT # 2

3" Premium Rear Bracket for Euro Slides

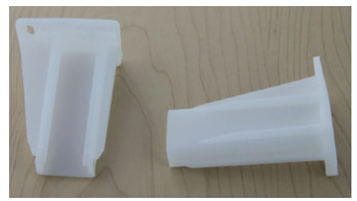

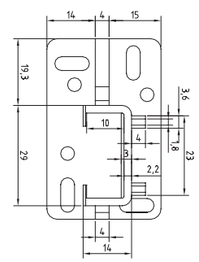

EUSKT-2-L LEFT
EUSKT-2-R RIGHT
CASE: 500 pieces per box

## EUSKT # 5

3-1/2" Heavy Duty Rear Bracket for
Euro Slides w/o Dowels

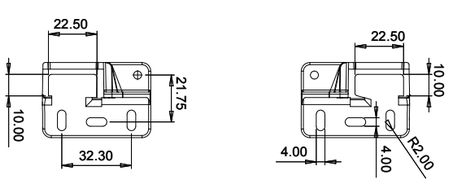


EUSKT-5-L LEFT
EUSKT-5-R RIGHT
CASE: 500 pieces per box

## EUSKT # 6

3-1/2" Heavy Duty Universal
Adjustable Rear Bracket for
Euro Slides w/ Dowels

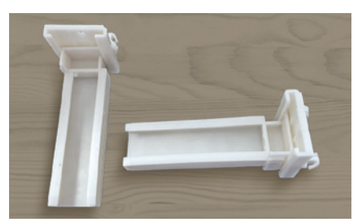

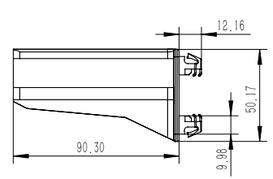


EUSKT-6
CASE: 250 pieces per box





## Model: # 4700 Bayonet Ball Bearing Slide

* Full Extension
* Side Mounted
* 46mm Height
* Flat Sided Profile
* 12.7mm Side Clearance
* Case: 10 Pairs
* Finish: Zinc
* Lever Disconnect
* Size: 16"~ 23"
* Load Capacity: 100 lbs
* Material: Cold Rolled Steel
* OT = 1." Over Travel

**ITEM NUMBER**
4700-16-ZP
4700-17-ZPOT
4700-19-ZPOT
4700-23-ZPOT

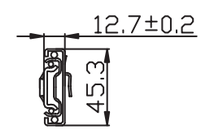

# TRASH CAN PULL OUTS



## Soft Close Pull Outs

**Unique Features**

* One adjustable bottom mount unit that fits any cabinet opening from 16" to 22 11/16"
* One adjustable bottom mount unit that fits any cabinet opening from 11 3/4" to 16 11/16"
* All needed components come with 1 part number.
* Dynamic load capacity 100 lbs.
* A sleek look that fits any contemporary or Modern Kitchen
* Built to last
* Full Extension undermounts
* Adjustments:
  - -Tilt Adjustment
  - -Height Adjustment
  - -Side to Side Adjustment

### BOTTOM MOUNT SOFT CLOSE PULL OUT (DOUBLE 35 QUART)

**ITEM NUMBER**
72BMSC1215DBL
72BMSC1821DBL

### TOP MOUNT SOFT CLOSE PULL OUT (DOUBLE 35 QUART)

**ITEM NUMBER**
72TMSC1821DBL

### PLASTIC WASTE TRASH CAN

**ITEM NUMBER**
70TC35GR
70TC35BK
70TC35WT

**COLOR**
Grey / Black / White

**CAPACITY**
35 Quarts

## Trash Can Pull Outs

* 3D Adjustable
* Full Extension
* Ball Bearing Slide
* Load capacity 100 Lbs
* Nominal Slide Length 18"
* Polished Chrome
* Door Mountable
* Bottom Mount

* Cans and Door Brackets sold separately

### SINGLE 35 QUART TRASH CAN PULL OUT

**ITEM NUMBER**
70BBSGL35PC

**CASE**
1 Set

### DOUBLE 35 QUART TRASH CAN PULL OUT

**ITEM NUMBER**
70BBDBL35PC

**CASE**
1 Set

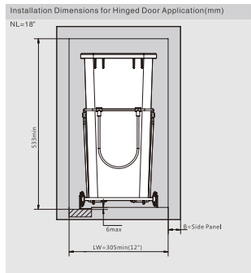


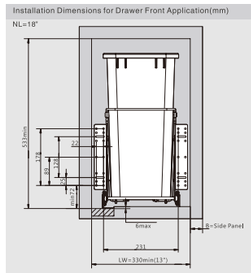


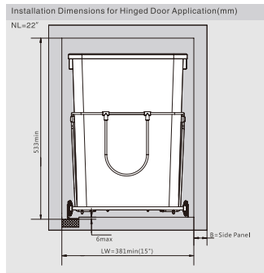


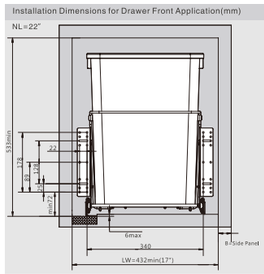


### DOOR MOUNTING BRACKET

**ITEM NUMBER**
70BRKT

**CASE**
20 Sets

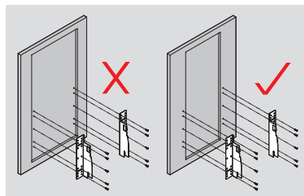

# LAZY SUSAN COLLECTION

**LS18RD.WT**
18" ROUND
Lazy Susan White
Plastic with
stainless steel pole

**LS24RD.WT**
24" ROUND
Lazy Susan White
Plastic with
stainless steel pole

**LS28RD.WT**
28" ROUND
Lazy Susan White
Plastic with
stainless steel pole

**LS24KD.WT**
24" KIDNEY
Lazy Susan White
Plastic with
stainless steel pole

**LS28KD.WT**
28" KIDNEY
Lazy Susan White
Plastic with
stainless steel pole

**LS32KD.WT**
32" KIDNEY
Lazy Susan White
Plastic with
stainless steel pole

**LS18RD.3TRAY**
18" ROUND Lazy
Susan White with
3 Trays

Item Adjustment
Range between
31.5"-43"





# INSTITUTIONAL HINGES

**H760.**
Institutional Hinge 3/4" Overlay x 13/16" Door

| | | | |
|---|---|---|---|
| **CASE QTY** | 100 | **WEIGHT/CASE** | 46 lbs |
| **BOX QTY** | 10 | | |

| **Available Colors** | **Item Number** |
|---|---|
| Dull Chrome | H760.DC |
| Powder Dull Chrome | H760.PDC |

**H780.DC**
Institutional Hinge 13/16" Overlay x 13/16" Door

| | | | |
|---|---|---|---|
| **CASE QTY** | 100 | **WEIGHT/CASE** | 46 lbs |
| **BOX QTY** | 10 | | |

| **Available Colors** | **Item Number** |
|---|---|
| Dull Chrome | H780.DC |

**H760.SS**
Institutional Hinge 3/4" Overlay x 13/16" Door

| | | | |
|---|---|---|---|
| **CASE QTY** | 100 | **WEIGHT/CASE** | 46 lbs |
| **BOX QTY** | 10 | | |

| **Available Colors** | **Item Number** |
|---|---|
| Stainless Steel | H760.SS |

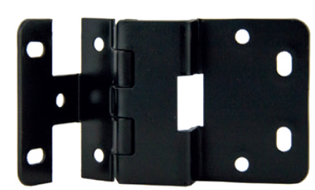

**H760-45.**
Institutional Hinge 3/4" Overlay x 13/16" Door
with 45mm CC on the Door Leaf

| | | | |
|---|---|---|---|
| **CASE QTY** | 100 | **WEIGHT/CASE** | 46 lbs |
| **BOX QTY** | 10 | | |

| **Available Colors** | **Item Number** |
|---|---|
| Black | H760-45.BK |
| Dull Chrome | H760-45.DC |

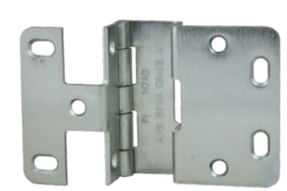

**H740.DC**
Institutional Hinge 3/4" Overlay x 3/4" Door

| | | | |
|---|---|---|---|
| **CASE QTY** | 100 | **WEIGHT/CASE** | 46 lbs |
| **BOX QTY** | 10 | | |

| **Available Colors** | **Item Number** |
|---|---|
| Dull Chrome | H740.DC |

# EUROPEAN HINGES & PLATES

# SFX SERIES

## SOFT-CLOSE HINGES

### FULL OVERLAY

110° Soft Close Clip-On
CAM Hinge Full Overlay
**3311-SC** No Dowels
**3311-8D-SC** With Dowels

**CASE QTY** 200

### HALF OVERLAY

110° Soft Close Clip-On
CAM Hinge Half Overlay
**3322-SC** No Dowels
**3322-8D-SC** With Dowels

**CASE QTY** 200

### INSET

110° Soft Close Clip-On
CAM Hinge Inset
**3333-SC** No Dowels
**3333-8D-SC** With Dowels

**CASE QTY** 200

### 165° HINGE

165° SFX Series Soft Close
Clip-On CAM Hinge F/O w/
8mm Dowels
**33165-8D-SC**

**CASE QTY** 100

### CORNER

45° SFX Series Corner Hinge
Soft Close Clip-On CAM w/
Dowels
**3345-8D-SC**

**CASE QTY** 200

### BLIND CORNER

90° SFX Series Corner Hinge
Soft Close Clip-On CAM w/
Dowels
**3390-8D-SC**

**CASE QTY** 200

### FULL OVERLAY

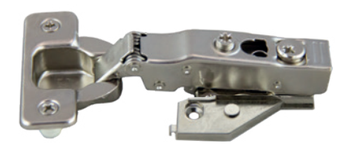

110 Deg +3mm Assembled
Soft Close Hinge & Plate W/
Dowels
**33118DSC+3303CAMSC**

**CASE QTY** 200

# SFX SERIES

## SOFT-CLOSE HINGES

### FULL OVERLAY

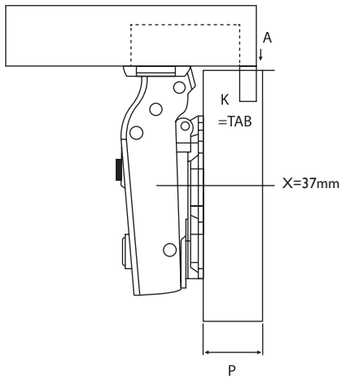


| | P= | 16 | 17 | 18 | 19 |
|---|---|---|---|---|---|
| K=3 | A= | 1 | 2 | 3 | 4 |
| K=4 | A= | 0 | 1 | 2 | 3 |
| K=5 | A= | -1 | 0 | 1 | 2 |
| K=6 | A= | -2 | -1 | 0 | 1 |

P = Cabinet Panel Thickness
A = Cabinet Panel Reveal when door is closed
K = Tab or Drilling Distance from edge of door

Constant Distance
Full Overlay 12mm

### HALF OVERLAY

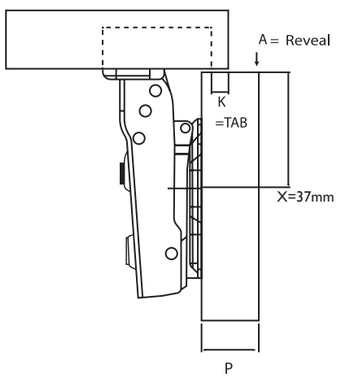


| | P= | 16 | 17 | 18 | 19 |
|---|---|---|---|---|---|
| K=3 | A= | 10 | 11 | 12 | 13 |
| K=4 | A= | 9 | 10 | 11 | 12 |
| K=5 | A= | 8 | 9 | 10 | 11 |
| K=6 | A= | 7 | 8 | 9 | 10 |

P = Cabinet Panel Thickness
A = Cabinet Panel Reveal when door is closed
K = Tab or Drilling Distance from edge of door

Constant Distance
Half Overlay 3mm

### INSET

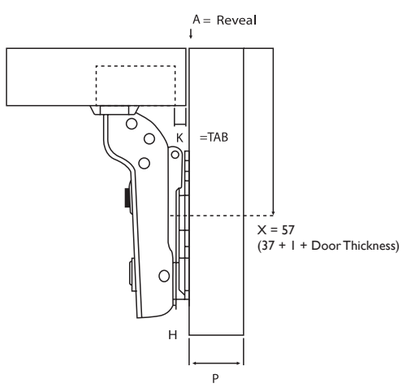


| | K Distance | K=3 | K=4 | K=5 | K=6 |
|---|---|---|---|---|---|
| H=0 | A= | 3 | 2 | 1 | 0 |
| H=2 | A= | 5 | 4 | 3 | 2 |

(H= Plate Thickness)
P = Cabinet Panel Thickness
A = Cabinet Panel Reveal when door is closed
K = Tab or Drilling Distance from edge of door

Constant Distance
Inset -6mm





# SLX SERIES

## SELF-CLOSE HINGES

## SLX SERIES, ONLY AVAILABLE IN FULL OVERLAY

### FULL OVERLAY

110 SLX Series Self Close Clip Hinge Full Overlay / works with Soft Close plates
**3411** No Dowels
**3411-8D** With Dowels

**CASE QTY** 200

### FULL OVERLAY

120 SLX Series Self Close Hinge Full Overlay W/Dowels
**34120-8D** With Dowels

**CASE QTY** 200

### 165° HINGE

165° SLX Series Self Close Clip-On CAM Hinge F/O w/ 8mm Dowels / works with Soft Close plates
**34165-8D**

**CASE QTY** 100

### FULL OVERLAY

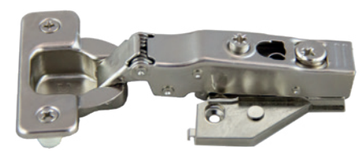

110 Deg +3mm SLX Series Assembled Self Close Hinge & Plate W/Dowels
**34118DSC+3303CAMSC**

**CASE QTY** 200

### FULL OVERLAY

110 SLX Series Free Swing Hinge Full Overlay W/ 8mm Dowels
**3111-8D**

**CASE QTY** 200

### FULL OVERLAY

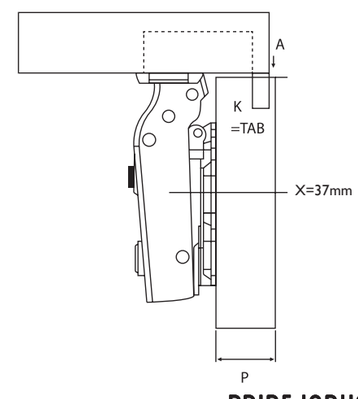


| | P= | 16 | 17 | 18 | 19 |
|---|---|---|---|---|---|
| K=3 | A= | 1 | 2 | 3 | 4 |
| K=4 | A= | 0 | 1 | 2 | 3 |
| K=5 | A= | -1 | 0 | 1 | 2 |
| K=6 | A= | -2 | -1 | 0 | 1 |

P = Cabinet Panel Thickness
A = Cabinet Panel Reveal when door is closed
K = Tab or Drilling Distance from edge of door

Constant Distance
Full Overlay 12mm

# SFX/SLX SERIES COMPATIBLE PLATES

## FACE FRAME PLATE

Soft Close Face Frame Clip Plate
**3300-SC** 1mm 5/8" Overlay
**3303-SC** 3mm 1/2" Overlay

**CASE QTY** 200

## FF PLATE WITH CAM ADJUSTMENT

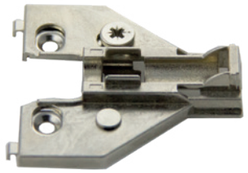

Cam Soft Close Face Frame Clip Plate
**3300CAM-SC** 0mm 5/8" Overlay
**3303CAM-SC** 3mm 1/2" Overlay
**3306CAM-SC** 6mm 3/8" Overlay

**CASE QTY** 200

## FRAMELESS STEEL PLATE

0mm Soft Close Euro Box Clip Plate
**3300**

**CASE QTY** 200

Soft Close Euro Box Clip Plate w/ System Screws
**3300.S** 0mm
**3302.S** 2mm
**3304.S** 4mm

**CASE QTY** 200

## FRAMELESS STEEL PLATE W/CAM ADJUSTMENT

0mm Soft Close Cam Adjustable Euro Box Clip Plate. 3/4" OL
**96T00TQ**
**96T02TQ** Euro Screws

**CASE QTY** 200

2mm Soft Close Cam Adjustable Euro Box Clip Plate 5/8" OL
**96T20TQ**
**96T22TQ** Euro Screws

**CASE QTY** 200

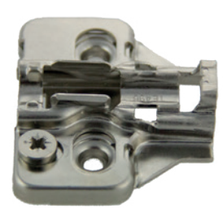

4mm Soft Close Cam Adjustable Euro Box Clip Plate 1/2" OL
**96T40TQ**
**96T42TQ** Euro Screws

**CASE QTY** 200



PRIDE INDUSTRIAL®
DECORATIVE HARDWARE
FUNCTIONAL HARDWARE
& MORE

# EZ SNAP

SOFT CLOSE HINGES

NEW PRODUCT

- 2-way stop hinge: crafted to improve the functionality and durability of cabinet doors. Providing dual stopping points prevents doors from swinging excessively, protecting both the doors and the cabinet structure.
- Door opening action is effortless with a light negative pull force.
- The door gap achieves a minimum 2mm gap without any friction to the door or frame, which assists with tight reveals.
- Easy Snap-On and secure connection of hinge and plate. The new Snap-On feature enables quicker installation in the shop and on the job.
- Refined look with a precise fit
- Face Frame & Frameless Application
  - True 0mm Face Frame mounting plate, allowing for a ¾" overlay with achievable results.
- Full Cam Adjustable Euro Hinge

# EZ SNAP SOFT CLOSE HINGE

## FULL OVERLAY

EZ Snap Soft Close 105° Clip-On
Full Overlay Cam Hinge

| | |
|---|---|
| **ESF105** | No Dowels |
| **ESF105D** | With Dowels |

## HALF OVERLAY

EZ Snap Soft Close 105° Clip-On
Half Overlay Cam Hinge

| | |
|---|---|
| **ESHF105** | No Dowels |
| **ESHF105D** | With Dowels |

## INSET

EZ Snap Soft Close 105° Clip-On
Inset Cam Hinge

| | |
|---|---|
| **ESIN105** | No Dowels |
| **ESIN105D** | With Dowels |

## 30° HINGE

EZ Snap Soft Close 30° Clip-On
Soft Close Corner Hinge
With Dowel

| | |
|---|---|
| **ESC30D** | With Dowels |

## 45° HINGE

EZ Snap Soft Close 45° Clip-On
Soft Close Corner Hinge
With Dowel

| | |
|---|---|
| **ESC45D** | With Dowels |

## 90° HINGE

EZ Snap Soft Close 90° Clip-On
Soft Close Corner Hinge
With Dowel

| | |
|---|---|
| **ESC90D** | With Dowels |

## FRAMELESS STEEL PLATE

0mm Soft Close Euro Plate

| | |
|---|---|
| **EES0** | System Screws |
| **EE0** | No Screws |

2mm Soft Close Euro Plate

| | |
|---|---|
| **EES2** | System Screws |
| **EE2** | No Screws |

## FRAMELESS STEEL PLATE W/CAM ADJUSTMENT

0mm Soft Close Cam Adj Plate

| | |
|---|---|
| **EECM0S** | System Screws |
| **EECM0** | No Screws |

2mm Soft Close Euro Plate

| | |
|---|---|
| **EECM2S** | System Screws |
| **EECM2** | No Screws |

## FACE FRAME PLATE

Face Frame Steel Plate

| | |
|---|---|
| **EFF0** | 0 mm |
| **EFF3** | 3 mm |

## FACE FRAME PLATE W/CAM ADJUSTMENT

Face Frame Steel Plate with
Cam Adj

| | |
|---|---|
| **EFFCM0** | 0 mm |
| **EFFCM3** | 3 mm |



PRIDE INDUSTRIAL®
DECORATIVE HARDWARE
FUNCTIONAL HARDWARE
& MORE

# PIVOT-STAR

SPEED ADJUSTABLE SOFT CLOSE HINGES

## STANDOUT FEATURES INCLUDE

**Speed adjustment cam screw enables hinge to handle multiple door weights.**

**Patented piston & mechanism allows consistent opening and closing at uniform speed without the feeling of pausing.**

**Less than 0.5mm door gap.**

**All new SNAP-FIT structure**

## ALL NEW SNAP-FIT STRUCTURE. THE CONNECTIONS ARE TIGHT AND SECURE. INSTALLATION AND DISMANTLING ARE MORE CONVENIENT.

It is quick to install and quick to disassemble.
The exquisite snap-fit design makes installation simple and convenient.

## RUST RESISTANT WITHSTANDS HIGH AND LOW TEMPERATURES

The hinges have achieved the testing standard for 30 hours of acidity
The damping effects are good under environmental testing at high temperatures of +122° F and low temperatures of -22° F

Opening the door is light and gentle, and the peak value of the door opening force is lower than 18.5 N

Closing the door is smooth, and the door is closed at a uniform speed without any feeling of pausing The door closing time is 3-5 seconds

## EUROPLATE & FACE-FRAME PLATES

## GAP FOR DOOR OPENING

Owing to the meticulous design for the motion track, the gap at the door side is nearly invisible. When the door panel thickness is 19 mm and K = 5, the door side crack is only 1.4 mm

## THE DOOR CLOSING SPEED IS ADJUSTABLE

One hinge for multiple door applications.

# PIVOT STAR HINGE

## FULL OVERLAY

110° F/O Soft Close hinge
W/Speed Adjustment

| | |
|---|---|
| 4411-SC | No Dowels |
| 4411-8D-SC | With Dowels |

CASE QTY 200

## HALF OVERLAY

110° H/O Soft Close Hinge
W/Speed Adjustment

| | |
|---|---|
| 4422-SC | No Dowels |
| 4422-8D-SC | With Dowels |

CASE QTY 200

## INSET

110° Inset Soft Close Hinge
W/Speed Adjustment

| | |
|---|---|
| 4433-SC | No Dowels |
| 4433-8D-SC | With Dowels |

CASE QTY 200

## 165° HINGE

165° Soft Close hinge
W/Speed Adjustment

| | |
|---|---|
| 4465-SC | No Dowels |
| 4465-8D-SC | With Dowels |

## FRAMELESS STEEL PLATE

0mm Soft Close Box Clip
Plate for Pivot Star Hinge

| | |
|---|---|
| 4400 | No Screws |
| 4400.S | System Screws |

## W/CAM ADJUSTMENT

0mm Soft Close
Cam Adj Box Clip Plate

| | |
|---|---|
| 4400-CAM | No Screws |
| 4400-CAM.S | System Screws |

## FACE FRAME PLATE

Soft Close Face Frame Plate
for Pivot Star Hinge

| | |
|---|---|
| 4401 | 1mm |
| 4403 | 3mm |

2mm Soft Close Box Clip
Plate for Pivot Star Hinge

| | |
|---|---|
| 4402 | No Screws |
| 4402.S | System Screws |

2mm Soft Close Cam Adj Box
Clip Plate

| | |
|---|---|
| 4402-CAM | No Screws |
| 4402-CAM.S | System Screws |

## FF PLATE WITH CAM ADJUSTMENT

Soft Close Face Frame Plate
with Cam Adjustment

| | |
|---|---|
| 4401-CAM | 1mm |
| 4403-CAM | 3mm |



PRIDE INDUSTRIAL®
DECORATIVE HARDWARE
FUNCTIONAL HARDWARE
& MORE

# PIVOT-STAR

SPEED ADJUSTABLE SOFT CLOSE HINGES

## FULL OVERLAY

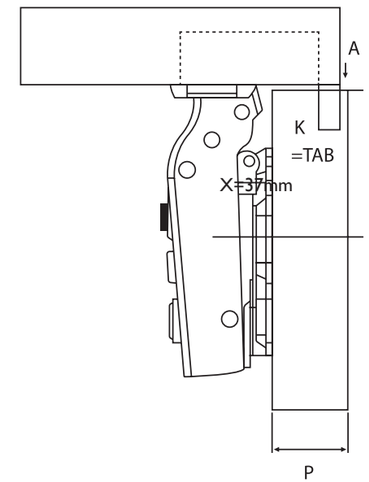


| | P= | 16 | 17 | 18 | 19 |
|---|---|---|---|---|---|
| K=3 | A= | 1 | 2 | 3 | 4 |
| K=4 | A= | 0 | 1 | 2 | 3 |
| K=5 | A= | -1 | 0 | 1 | 2 |
| K=6 | A= | -2 | -1 | 0 | 1 |

P = Cabinet Panel Thickness
A = Cabinet Panel Reveal when door is closed
K = Tab or Drilling Distance from edge of door

Constant Distance
Full Overlay 12mm

## HALF OVERLAY

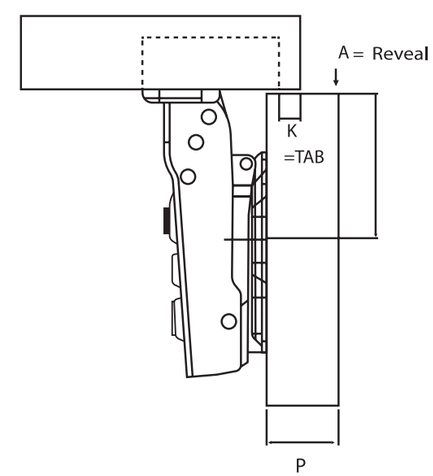


| | P= | 16 | 17 | 18 | 19 |
|---|---|---|---|---|---|
| K=3 | A= | 10 | 11 | 12 | 13 |
| K=4 | A= | 9 | 10 | 11 | 12 |
| K=5 | A= | 8 | 9 | 10 | 11 |
| K=6 | A= | 7 | 8 | 9 | 10 |

P = Cabinet Panel Thickness
A = Cabinet Panel Reveal when door is closed
K = Tab or Drilling Distance from edge of door

Constant Distance
Half Overlay 3mm

# CONCEALED HINGE PRODUCT SPECIFICATIONS

## INSET

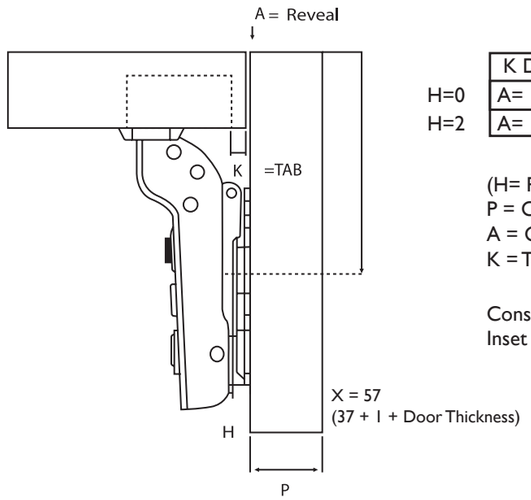


| | K Distance | K=3 | K=4 | K=5 | K=6 |
|---|---|---|---|---|---|
| H=0 | A= | 3 | 2 | 1 | 0 |
| H=2 | A= | 5 | 4 | 3 | 2 |

(H= Plate Thickness)
P = Cabinet Panel Thickness
A = Cabinet Panel Reveal when door is closed
K = Tab or Drilling Distance from edge of door

Constant Distance
Inset -6mm

## SPACE NEEDED TO OPEN THE DOOR

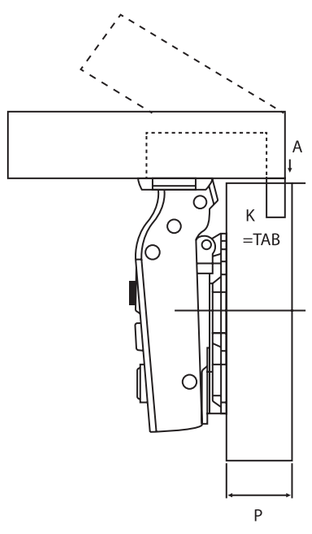


| | T= | 16 | 17 | 18 | 19 | 20 |
|---|---|---|---|---|---|---|
| K=3 | A= | 0.7 | 0.9 | 1.2 | 1.5 | 1.8 |
| K=4 | A= | 0.7 | 0.9 | 1.1 | 1.4 | 1.8 |
| K=5 | A= | 0.6 | 0.9 | 1.1 | 1.4 | 1.7 |
| K=6 | A= | 0.6 | 0.8 | 1.1 | 1.3 | 1.6 |

- T = Door thickness | - K = Drilling distance



PRIDE INDUSTRIAL®
DECORATIVE HARDWARE
FUNCTIONAL HARDWARE
& MORE

# SDX SERIES

## STANDARD CONCEALED HINGES

## FULL OVERLAY

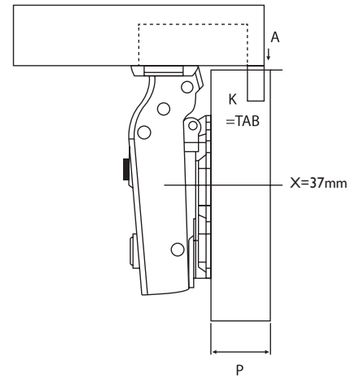


| | P= | 16 | 17 | 18 | 19 |
|---|---|---|---|---|---|
| K=3 | A= | 1 | 2 | 3 | 4 |
| K=4 | A= | 0 | 1 | 2 | 3 |
| K=5 | A= | -1 | 0 | 1 | 2 |
| K=6 | A= | -2 | -1 | 0 | 1 |

P = Cabinet Panel Thickness
A = Cabinet Panel Reveal when door is closed
K = Tab or Drilling Distance from edge of door

Constant Distance
Full Overlay 12mm

## HALF OVERLAY

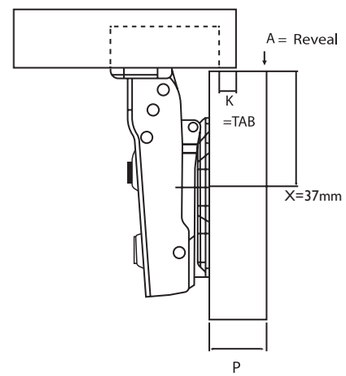


| | P= | 16 | 17 | 18 | 19 |
|---|---|---|---|---|---|
| K=3 | A= | 10 | 11 | 12 | 13 |
| K=4 | A= | 9 | 10 | 11 | 12 |
| K=5 | A= | 8 | 9 | 10 | 11 |
| K=6 | A= | 7 | 8 | 9 | 10 |

P = Cabinet Panel Thickness
A = Cabinet Panel Reveal when door is closed
K = Tab or Drilling Distance from edge of door

Constant Distance
Half Overlay 3mm

## INSET

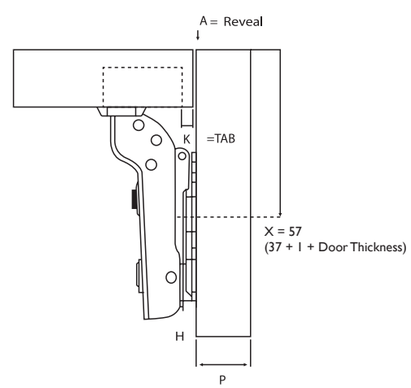


| | K Distance | K=3 | K=4 | K=5 | K=6 |
|---|---|---|---|---|---|
| H=0 | A= | 3 | 2 | 1 | 0 |
| H=2 | A= | 5 | 4 | 3 | 2 |

(H= Plate Thickness)
P = Cabinet Panel Thickness
A = Cabinet Panel Reveal when door is closed
K = Tab or Drilling Distance from edge of door

Constant Distance
Inset -6mm

# SDX SERIES

## STANDARD CONCEALED HINGES

### FULL OVERLAY 110°

Click On Hinge 110°, FO, SC,
**#633A.CL** No Dowels
**#634A.CL** With Dowels

**CASE QTY** 200

### FULL OVERLAY W/CAM ADJUSTMENT 110°

Click On Cam Hinge 110°, FO, SC, w/ Dowels
**HCAM634A.CL**

**CASE QTY** 200

### HALF OVERLAY 110°

Click On Hinge 110°, HO, SC
**#633B.CL** No Dowels
**#634B.CL** With Dowels

**CASE QTY** 200

### INSET 110°

Click On Hinge 110°, Inset, SC
**#633C.CL** No Dowels
**#634C.CL** With Dowels

**CASE QTY** 200

### CORNER

Corner Clip-On Hinge w/ Dowels
**H30-D.CL** 30°
**H45-D.CL** 45°

**CASE QTY** 200

### 165° HINGE

Click On Hinge 165°, FO, SC,
**H51A.CL** No Dowels
**H52A.CL** With Dowels

**CASE QTY** 100

### PIE CORNER

Click On Pie Corner Hinge w/ Dowels
**H80-D.CL**

**CASE QTY** 200

### BLIND CORNER

Click On Blind Corner Hinge no Dowels
**H90.CL**

**CASE QTY** 200



PRIDE INDUSTRIAL®
DECORATIVE HARDWARE
FUNCTIONAL HARDWARE
& MORE

SDX SERIES

STANDARD CONCEALED HINGES

### FACE-FRAME PLATES

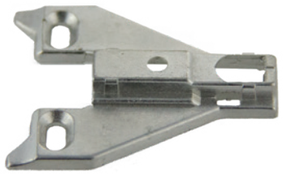

Click On 0mm
Face Frame Plate
**FCL.0** 5/8" Overlay
**FCL.3** 1/2" Overlay
**FCL.6** 3/8" Overlay

**CASE QTY** 200

Click On 0mm
Steel Face Frame Plate
**FCL.S.0** 5/8" Overlay
**FCL.S.3** 1/2" Overlay
**FCL.S.6** 3/8" Overlay

**CASE QTY** 200

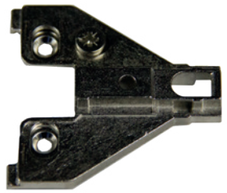

CAM Click On
Face Frame Plate
**FCLCAM.0** 0mm 5/8" OL
**FCLCAM.3** 3mm 1/2" OL

**CASE QTY** 200

### FRAMELESS STEEL PLATE

Click On Steel Box Plate. 3/4" OL for frameless cabinets
**CLK.0** 0mm
**CLK.2** 2mm

**CASE QTY** 200

0mm Box Plate w/ Special Adjustment Screw & Euro Screws. No CAM, 3/4" OL
**CLK.0SC**

**CASE QTY** 200

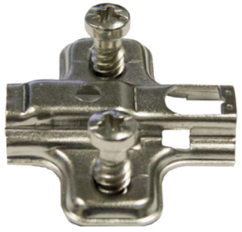

Click On Stamped Steel Box Plate. 5/8" OL for frameless cabinets
**CLK.0S** 0mm
**CLK.2S** 2mm
**CLK.4S** 4mm

**CASE QTY** 200

### FRAMELESS STEEL PLATE W/CAM ADJUSTMENT

Steel Box Plate
w/ Cam Adjustment
without screw
**T00TQ** 0mm
**T20TQ** 2mm

**CASE QTY** 200

Steel Box Plate
w/ Cam Adjustment w/ Screws
**T02TQ** 0mm w/ Screws
**T0CTQ** 0mm w/ Dowels & Screws
**T22TQ** 2mm w/ Screws
**T42TQ** 4mm w/ Screws

**CASE QTY** 200

# SLIDE ON SDX SERIES

## FULL OVERLAY

Slide On Hinge 110°, FO, SC
**#633A.SO** No Dowels

**CASE QTY** 200

## INSET

Slide On Hinge 110°, Inset, SC no Dowels
**#633C.SO**

**CASE QTY** 200

## FRAMELESS PLATE

Slide On 0mm
Metal Box Plate
For Frameless Cabinets
**SLO.0** 3/4" OL
**SLO.2** 5/8" OL

**CASE QTY** 200

1 Pc Face Frame Hinge
w/ Dowels
**H250-D** 1/2" OL
**H254-D** 3/4" OL

**CASE QTY** 200

6 Way 3 Cam Adjustable 1 pc
Face Frame Hinge 1-1/4"
**H292-D** With Dowels
**H292-D-SC**

**CASE QTY** 200

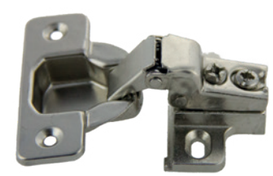

Short Arm Face Frame
Hinge = 3/8" Overlay
**H275** No Dowels

**CASE QTY** 200

Short Arm Face Frame
Hinge w/ STEEL PLATE
**H275.S-D** 3/8" Overlay
**H280.S-D** 1/2" Overlay

**CASE QTY** 200

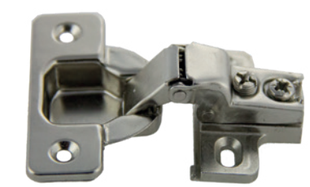

Short Arm Face Frame
Hinge = 1/2" Overlay
**H280** No Dowels
**H280-D** With Dowels

**CASE QTY** 200

Short Arm Soft Close Face
Frame CAM Hinge Steel Plate
1/2" Overlay w/ Dowel
**HCAM280-D-SC** w/Dowel
**HCAM280-SC** No Dowe

**CASE QTY** 200

Short Arm Face Frame CAM
Hinge W/Cam Steel Plate 1/2"
Overlay with Dowel
**H2CAM280-D** with Dowel

**CASE QTY** 200

Short Arm Face Frame CAM
Hinge W/Cam Steel Plate 1/2"
Overlay no Dowel
**H2CAM280-SC**
**H2CAM280-D-SC** with Dowel

**CASE QTY** 200

# COMPACT & SHORT ARM HINGES

## SELF-CLOSE AND SOFT CLOSE

4 Way 2 Cam Adjustable 1 pc Face Frame Hinge 1/2" OL

**H294** No Dowels
**H294-D** With Dowels

**CASE QTY** 200

Soft Close 4 Way 2 Cam Adjustable 1 pc Face Frame Hinge w/ Dowels 1/2" OL

**H294-SC** No Dowels
**H294-D-SC** Dowels

**CASE QTY** 200

4 Way 2 Cam Adjustable 1 pc Face Frame Hinge 3/4" OL

**H295** No Dowels
**H295-D** With Dowels

**CASE QTY** 200

Soft Close 4 Way 2 Cam Adjustable 1 pc Face Frame Hinge 3/4" OL

**H295-SC** No Dowels
**H295-D-SC** With Dowels

**CASE QTY** 200

6 Way 3 Cam Adjustable 1 pc Face Frame Hinge w/ Dowels 1/2" OL

**H296-D**

**CASE QTY** 200

4 Way 2 Cam Adjustable 1 pc Face Frame Hinge 1-1/4" OL

**H297** No Dowels
**H297-D** With Dowels

**CASE QTY** 200

Soft Close 4 Way 2 Cam Adjustable 1 pc Face Frame Hinge w/ Dowels 1-1/4" OL

**H297-SC** No Dowels
**H297-D-SC** With Dowels

**CASE QTY** 200

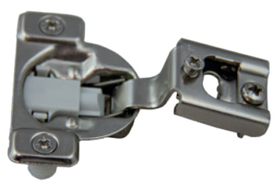

4 Way 2 Cam Adjustable 1 pc Face-Frame Hinge w/ Dowels 1" OL

**H298-D** No Soft Close
**H298-D-SC** Soft Close

**CASE QTY** 200

NEW PRODUCT

Soft Close 6 Way 3 Cam Adjustable 1 Pc Face Frame Clip on hinge W/Dowel 1-1/4" OL

**HCLP297DSC**
**HCLP297DSCUA**

**CASE QTY** 200





# COUNTERTOP BRACKET, L-BRACKETS & MENDING PLATES

NEW PRODUCT

**CB-**
Countertop Bracket
Thick Black Powder Coated

| Size | Item Number | Case Qty | Weight/Case |
|---|---|---|---|
| 10" x ¼" | CB-10.BK | 10 | 18.1 lbs |
| 14" x ¼" | CB-14.BK | 10 | 22.7 lbs |

**FIGURE 8**
Heavy Duty Figure 8

**CASE QTY** 2M **WEIGHT/CASE** 23 lbs

**LB-**
" L" Bracket

| Size | Colors | Item Number | Case | Weight/Case |
|---|---|---|---|---|
| 3/4 x 3/4 | Black | LB-3/4.BK | 2 M | 29 lbs |
| 3/4 x 3/4 | Zinc | LB-3/4.ZP | 2 M | 29 lbs |
| 1 x 1 | Zinc | LB-1.ZP | 1 M | 18 lbs |
| 1.5 x 1.5 | Zinc | LB-1.5.ZP | 1 M | 28 lbs |
| 2 x 2 | Zinc | LB-2.ZP | 0.5 M | 23.6 lbs |
| 2.5 x 2.5 | Zinc | LB-2.5.ZP | 0.5 M | 30 lbs |
| 3 x 3 | Zinc | LB-3.ZP | 0.5 M | 41 lbs |
| 3.5 x 3.5 | Zinc | LB-3.5.ZP | 300 | 39 lbs |
| 4 x 4 | Zinc | LB-4.ZP | 200 | 40 lbs |

1M = 1,000

**MP-**
Mending Plate Zinc Plated

| Size | Item Number | Case Qty | Weight/Case |
|---|---|---|---|
| 2" | MP-2.ZP | 1 M | 18 lbs |
| 3" | MP-3.ZP | 1 M | 28 lbs |
| 4" | MP-4.ZP | 0.5M | 18 lbs |
| | | 1M = 1,000 | |

**CB90.**
90 Degree Corner Bracket
1-1/4 x 1-1/4 x 2-1/4 Tall

**CASE QTY** 500 **WEIGHT/CASE** 36 lbs

| Available Colors | Item Number |
|---|---|
| Black | CB90.BK |
| Zinc | CB90.ZP |

**F-B**
Black Flat Bracket

| Size | Item Number | Case | Weight/Case |
|---|---|---|---|
| 2 x 4 | F-B 2 X 4.BK | 200 | 32 lbs |
| 2 x 6 | F-B 2 X 6.BK | 200 | 53 lbs |
| 2-1/4 x 2-1/4 | F-B 2-1/4.BK | 300 | 30 lbs |
| 3 x 6 | F-B 3 x 6.BK | 50 | 37.5 lbs |

**CB94.BK**
90 Degree Corner Bracket 3/4 x 5"

**CASE QTY** 500 **WEIGHT/CASE** 44 lbs

**SS19-5MM.ZP**
5mm x 24mm Straight Shelf Pin ZP

| | | | |
|---|---|---|---|
| **CASE QTY** | 5M | **WEIGHT/CASE** | 35 lbs |
| **Available Colors** | | **Item Number** | |
| Zinc Plated | | SS19-5MM.ZP | |

**SS20-5MM.ZP**
5mm x 16mm Duplo Shelf Pin ZP

| | | | |
|---|---|---|---|
| **CASE QTY** | 5M | **WEIGHT/CASE** | 26 lbs |
| **Available Colors** | | **Item Number** | |
| Zinc Plated | | SS20-5MM.ZP | |

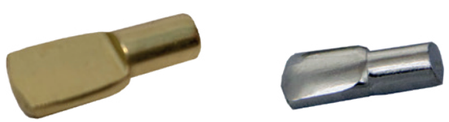

**SS21-5MM.**
5mm Spoon Shaped Shelf Support

| | | | |
|---|---|---|---|
| **CASE QTY** | 5M | **WEIGHT/CASE** | 27.9 lbs |
| **BOX QTY** | 1M | | |
| **Available Colors** | | **Item Number** | |
| Antique Brass | | SS21-5MM.AB | |
| Nickel | | SS21-5MM.NI | |
| Brass | | SS21-5MM.PB | |

**SS01-5MM.**
5mm " L" Shaped Shelf Support

| | | | |
|---|---|---|---|
| **CASE QTY** | 2M | **WEIGHT/CASE** | 25 lbs |
| **BOX QTY** | 1M | | |
| **Available Colors** | | **Item Number** | |
| Antique Brass | | SS01-5MM.AB | |
| Nickel | | SS01-5MM.NI | |
| Brass | | SS01-5MM.PB | |

**SS21-1/4.**
1/4" Spoon Shaped Shelf Support

| | | | |
|---|---|---|---|
| **CASE QTY** | 3.5M | **WEIGHT/CASE** | 35 lbs |
| **BOX QTY** | 0.1M | | |
| **Available Colors** | | **Item Number** | |
| Antique Brass | | SS21-1/4.AB | |
| Antique Copper | | SS21-1/4.AC | |
| Nickel | | SS21-1/4.NI | |
| Brass | | SS21-1/4.PB | |

**SS01-1/4.**
1/4 " L" Shaped Shelf Support

| | | | |
|---|---|---|---|
| **CASE QTY** | 2M | **WEIGHT/CASE** | 31 lbs |
| **BOX QTY** | 1M | | |
| **Available Colors** | | **Item Number** | |
| Antique Brass | | SS01-1/4.AB | |
| Nickel | | SS01-1/4.NI | |
| Brass | | SS01-1/4.PB | |

**B-3/4.WT**
White Plastic Spacer Block 3/4

| | | | |
|---|---|---|---|
| **CASE QTY** | 1,000 | **WEIGHT/CASE** | 15.3 lbs |



PRIDE INDUSTRIAL®
DECORATIVE HARDWARE
FUNCTIONAL HARDWARE
& MORE

SHELF SUPPORT

**SL10WT**
Plastic Locking Shelf Support
Shelf Lock 4.75mm Dia Pin

| | | | |
|---|---|---|---|
| **CASE QTY** | 3M | **WEIGHT/CASE** | 5.28 lbs |

**SS35-**
Plastic Locking Shelf Support
5mm x 5/8" Shelf

| | | | |
|---|---|---|---|
| **CASE QTY** | 5M | **WEIGHT/CASE** | 31 lbs |
| **Available Colors** | | **Item Number** | |
| Clear | | SS35-CLR | |
| White | | SS35-WT | |

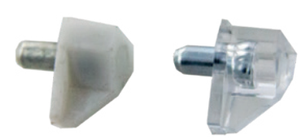

**SS23.**
Shelf Support w/ 5mm Metal Pin

| | | | |
|---|---|---|---|
| **CASE QTY** | 5M | **WEIGHT/CASE** | 37.7 lbs |
| **BOX QTY** | 1M | | |
| **Available Colors** | | **Item Number** | |
| Clear | | SS23.CLR | |
| White | | SS23.WT | |

**SS36-**
Plastic Locking Clear Shelf Support
5mm x 3/4" Shelf

| | | | |
|---|---|---|---|
| **CASE QTY** | 5M | **WEIGHT/CASE** | 31 lbs |
| **Available Colors** | | **Item Number** | |
| Clear | | SS36-CLR | |
| White | | SS36-WT | |

**RTA-**
Connector Screw M4 Thread x 15mm Long

| | | | |
|---|---|---|---|
| **CASE QTY** | 4M | | |
| **BOX QTY** | 1M | | |
| **Available Colors** | | **Item Number** | |
| Connector Screw | | RTA-15.NI | |
| Connector Sleeve 27mm | | RTA-27.NI | |
| Connector Sleeve 35mm | | RTA-35.NI | |

**RTA-3.**
RTA 32mm Male & Female Fittings

| | | | |
|---|---|---|---|
| **CASE QTY** | 2,500 | **WEIGHT/CASE** | 26 lbs |
| **Available Colors** | | **Item Number** | |
| Brown | | RTA-3.BN | |

**EC-14.AL**
Elbow Catch Aluminum with Strike Plate

| | | | |
|---|---|---|---|
| **CASE QTY** | 1,000 | **WEIGHT/CASE** | 41 lbs |
| **BOX QTY** | 100 | | |

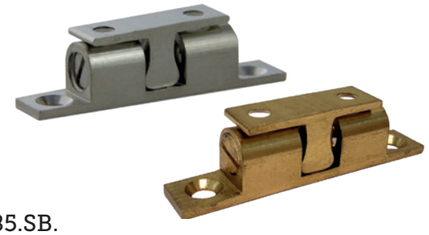

**C285.SB.**
2" Double Ball Catch Solid Brass

| | | | |
|---|---|---|---|
| **CASE QTY** | 1,000 | **WEIGHT/CASE** | 33 lbs |
| **BOX QTY** | 50 | | |

| Available Colors | Item Number |
|---|---|
| Nickel Plated | C285.SB.NI |
| Pollished Brass | C285.SB.PB |

**C241.AL**
Regular Aluminum Mag Poly Bagged
w/ Plate & Screws

| | | | |
|---|---|---|---|
| **CASE QTY** | 500 | **WEIGHT/CASE** | 41 lbs |
| **BOX QTY** | 50 | | |

| Available Colors | Item Number |
|---|---|
| Aluminum | C241.AL |

**C242.AL**
Heavy Duty Aluminum Mag Poly Bagged
w/ Plate & Screws

| | | | |
|---|---|---|---|
| **CASE QTY** | 500 | **WEIGHT/CASE** | 61.5 lbs |
| **BOX QTY** | 50 | | |

| Available Colors | Item Number |
|---|---|
| Aluminum | C242.AL |

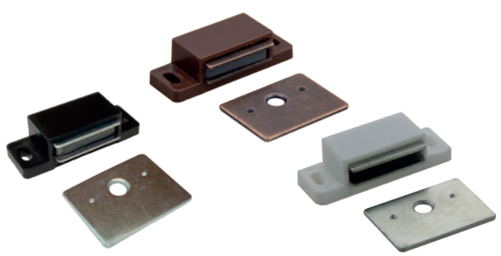

**C509.**
Single Mag Catch w/ Strike Plate & Screws

| | | | |
|---|---|---|---|
| **CASE QTY** | 1,000 | **WEIGHT/CASE** | 51 lbs |
| **BOX QTY** | 100 | | |

| Available Colors | Item Number |
|---|---|
| Black/Zinc Plate | C509.BK/ZP |
| Brown/Antique Copper | C509.BN/AC |
| White/Zinc Plate | C509.WT/ZP |

**C250.**
Heavy Duty Mag Catch
w/ Strike Plate & Screws

| | | | |
|---|---|---|---|
| **CASE QTY** | 500 | **WEIGHT/CASE** | 46 lbs |
| **BOX QTY** | 50 | | |

| Available Colors | Item Number |
|---|---|
| Brown/Antique Copper | C250.BN/AC |
| White/Zinc Plate | C250.WT/ZP |

**C411.**
Heavy Duty Double Roller Catch

| | | | |
|---|---|---|---|
| **CASE QTY** | 1,000 | **WEIGHT/CASE** | 41 lbs |
| **BOX QTY** | 100 | | |

| Available Colors | Item Number |
|---|---|
| Antique Copper | C411.AC |
| Zinc Plated | C411.ZP |

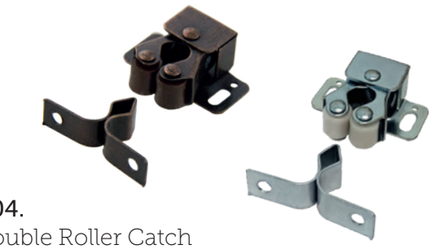

**C04.**
Double Roller Catch

| | | | |
|---|---|---|---|
| **CASE QTY** | 1,000 | **WEIGHT/CASE** | 41 lbs |
| **BOX QTY** | 100 | | |

| Available Colors | Item Number |
|---|---|
| Antique Copper | C04.AC |
| Zinc Plated | C04.ZP |

**SP-245.BK**
Glass Door Strike Plate Matte Black

| | | | |
|---|---|---|---|
| **CASE QTY** | 1,000 | **WEIGHT/CASE** | 31 lbs |
| **BOX QTY** | 500 | | |

| Available Colors | Item Number |
|---|---|
| Matte Black | SP-245.BK |

**C907.**
Single Mag Touch Latch Poly Bagged
w/ Screws & Plate

| | | | |
|---|---|---|---|
| **CASE QTY** | 1,000 | **WEIGHT/CASE** | 51 lbs |
| **BOX QTY** | 250 | | |

| Available Colors | Item Number |
|---|---|
| Black | C907.BK |
| White | C907.WT |

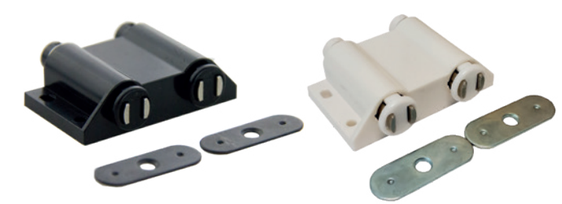

**C927.**
Double Mag Touch Latch Poly Bagged
w/ Screws & Plates

| | | | |
|---|---|---|---|
| **CASE QTY** | 500 | **WEIGHT/CASE** | 51 lbs |
| **BOX QTY** | 125 | | |

| Available Colors | Item Number |
|---|---|
| Black | C927.BK |
| White | C927.WT |

**H739-RP.**
Self Closing Flush Hinge
RETAIL Pack with Screws and Pads

**CASE QTY** 200 **WEIGHT/CASE** 33 lbs
**BOX QTY** 10

| Available Colors | Item Number | |
|---|---|---|
| Oil Rubbed Bronze | H739-RP.10B | |
| Antique Brass | H739-RP.AB | |
| Matte Black | H739-RP.BK | |
| Dull Nickel | H739-RP.DN | 100/25 P |

**H739**
Self Closing Flush Hinge

**CASE QTY** 200 **WEIGHT/CASE** 33 lbs

| Available Colors | Item Number |
|---|---|
| Matte Black | H739.BK |
| Brass Plated | H739.BP |
| Dull Nickel | H739.DN |
| Chrome Plated | H739.PC |
| White | H739.WT |

**H650.AB**
Armoire Hinge 270 Degree Antique Brass
3/4" OL x 3/4" Door

**CASE QTY** 200 **WEIGHT/CASE** 51 lbs

| Available Colors | Item Number |
|---|---|
| Antique Brass | H650.AB |



PRIDE INDUSTRIAL®
DECORATIVE HARDWARE
FUNCTIONAL HARDWARE
& MORE

SHUTTER HARDWARE

**H123.**
Shutter Butt Hinge 2-1/2" x 1-1/2" w/ Loose Pin

**CASE QTY** 500 **WEIGHT/CASE** 46 lbs
**BOX QTY** 50

| Available Colors | Item Number |
|---|---|
| Antique Brass | H123.AB |
| Almond | H123.AL |
| White | H123.WT |

**H130.NI**
3 Leaf Flag Hinge Nickel Plate

**CASE QTY** 200 **WEIGHT/CASE** 25 lbs

| Available Colors | Item Number |
|---|---|
| Nickel Plated | H130.NI |

**H145.**
Non-Mortise Shutter Hinge 3" w/ Loose Pin

**CASE QTY** 500 **WEIGHT/CASE** 61 lbs
**BOX QTY** 50

| Available Colors | Item Number |
|---|---|
| Antique Brass | H145.AB |
| White | H145.WT |

**H124.**
Shutter Butt Hinge 2-1/2" x 2-1/2"
w/ Loose Pin

**CASE QTY** 500 **WEIGHT/CASE** 86 lbs
**BOX QTY** 50

| Available Colors | Item Number |
|---|---|
| Antique Brass | H124.AB |
| Almond | H124.AL |
| White | H124.WT |

**SHS-6.**
Shutter Screw Flat Head Phillip Drive
6 x 3/4 Type 17

**CASE QTY** 10,000 **WEIGHT/CASE** 23 lbs
**BOX QTY** 1,000

| Available Colors | Item Number |
|---|---|
| Antique Brass | SHS-6.AB |
| Almond | SHS-6.AL |

**SHC-1.ZP**
Shutter Catch OUTSET Zinc Plated

**CASE QTY** 1,000 **WEIGHT/CASE** 21 lbs
**BOX QTY** 100

**SHC-2.**
Shutter Catch INSET

**CASE QTY** 1,000 **WEIGHT/CASE** 21 lbs
**BOX QTY** 100

| Available Colors | Item Number |
|---|---|
| Brass Plated | SHC-2.BP |
| White | SHC-2.WT |
| Zinc Plated | SHC-2.ZP |

**SHP-21.WT**
Shutter Pin White

**CASE QTY** 10,000 **WEIGHT/CASE** 11 lbs
**BOX QTY** 2,500

| Available Colors | Item Number |
|---|---|
| White | SHP-21.WT |

**SRP-30.WT**
Shutter Repair Pin White pack

**CASE QTY** 10,000 **WEIGHT/CASE** 11 lbs
**BOX QTY** 1,000

| Available Colors | Item Number |
|---|---|
| White | SRP-30.WT |

**PL100.BK**
Peninsula Leg 3" Dia x 27-3/4" High
Matte Black

**CL50-**
Cabinet Adjustable Leg
Satin Chrome & Black Wrinkle

| Available Sizes | Item Number |
|---|---|
| 4" | CL50-100.SC |
| 6" | CL50-150.SC |
| 8" | CL50-200.SC |
| 4" | CL50-100.BKW |
| 6" | CL50-150.BKW |
| 8" | CL50-200.BKW |

**CASE QTY** 24

**CL40-**
Cabinet Adjustable Leg W/Toe Kick Clip Option

| Available Sizes | Item Number |
|---|---|
| 3-3/4" | CL40-100 |
| 4-3/4" | CL40-120 |
| 5-3/4" | CL40-150 |
| OPTIONAL CLIP | CL40-CLIP (1000/200) Set |

**CASE QTY** 200 **BOX QTY** 50

**GR186-45.BK**
1-3/4" Plastic 2 pc Grommet Black

**CASE QTY** 1,000 **WEIGHT/CASE** 51 lbs

| Available Colors | Item Number |
|---|---|
| Black | GR186-45.BK |

**GR188-60.**
60mm Deluxe Plastic 3 pc Grommet

**CASE QTY** 500 **WEIGHT/CASE** 26 lbs

| Available Colors | Item Number |
|---|---|
| Black | GR188-60.BK |
| Brown | GR188-60.BN |
| Gray | GR188-60.GRY |
| White | GR188-60.WT |

**GR190-80.**
80mm Deluxe Plastic 3 pc Grommet

**CASE QTY** 300 **WEIGHT/CASE** 19 lbs

| Available Colors | Item Number |
|---|---|
| Black | GR190-80.BK |
| Brown | GR190-80.BN |
| Gray | GR190-80.GRY |
| White | GR190-80.WT |

**GR187-51.**
51mm Deluxe Plastic 3 pc Grommet

**CASE QTY** 1,000 **WEIGHT/CASE** 51 lbs
**BOX QTY** 200

| Available Colors | Item Number |
|---|---|
| Black | GR187-51.BK |
| Brown | GR187-51.BN |
| Gray | GR187-51.GRY |
| White | GR187-51.WT |

**GR189-70.**
70mm Deluxe Plastic 3 pc Grommet

**CASE QTY** 400 **WEIGHT/CASE** 25 lbs

| Available Colors | Item Number | |
|---|---|---|
| Black | GR189-70.BK | |
| Brown | GR189-70.BN | |
| White | GR189-70.WT | (500) |

**GR1350-40.BK**
1 pc Metal Grommet 40mm (1-3/4") Matte Black

**CASE QTY** 500 **WEIGHT/CASE** 32 lbs

| Available Colors | Item Number |
|---|---|
| Black | GR1350-40.BK |



PRIDE INDUSTRIAL®
DECORATIVE HARDWARE
FUNCTIONAL HARDWARE
& MORE

GROMMETS

**GRE-71880003-**
Electric Grommet, 80mm w/ 2 USB connections & power outlet

| Available Colors | Item Number |
|---|---|
| Black | GRE-71880003-BK |
| Grey/Silver | GRE-71880003-GRY |

**GR22.BK**
80mm 1 pc Grommet w/ Flexible Top Black

| Available Colors | Item Number |
|---|---|
| Black | GR22.BK |

**GR63.**
63mm ( 2-1/2" ) Plastic 2 pc Grommet

**CASE QTY** 200 **WEIGHT/CASE** 9 lbs

| Available Colors | Item Number |
|---|---|
| Black | GR63.BK |
| White | GR63.WT |

**GR-82910.**
63mm (2-1/2") 2 pc Metal Grommet

**CASE QTY** 150 **WEIGHT/CASE** 46 lbs
**BOX QTY** 15

| Available Colors | Item Number |
|---|---|
| Black | GR-82910.BK |
| Satin Nickel | GR-82910.SN |

**GR76.**
3" Plastic 2 pc Grommet

**CASE QTY** 100 **WEIGHT/CASE** 9 lbs

| Available Colors | Item Number |
|---|---|
| Black | GR76.BK |
| Light Gray | GR76.LT-GRAY |

**B850.NP**
Bed Rail Fastener 5" w/ Round Corners
Zinc Plated
**CASE QTY** 25 SETS **WEIGHT/CASE** 20 lbs

**BKT-100**
Breadboard Bracket
**CASE QTY** 200 **WEIGHT/CASE** 31 lbs

**L35.KA.**
7/8" Desk Lock Keyed Alike
**CASE QTY** 240 **WEIGHT/CASE** 39 lbs
**BOX QTY** 12

| Available Colors | Item Number |
|---|---|
| Brass Plated | L35.KA.PB |

**FF**
False Front Catch Metal Clip and Front Dowel
**CASE QTY** 100

| | |
|---|---|
| FFS11 | False Front Dowel |
| FFC11 | False Front Metal Clip |

**TR**
Stainless Steel Trash Ring

| Available Sizes | Item Number | CASE QTY |
|---|---|---|
| 6" Dia x 1" Deep | TR6X1.SS | 108 pieces |
| 6" Dia x 2" Deep | TR6X2.SS | 60 pieces |
| 6" Dia x 6" Deep | TR6X6.SS | 24 pieces |
| 8" Dia x 1" Deep | TR8X1.SS | 72 pieces |
| 8" Dia x 2" Deep | TR8X2.SS | 42 pieces |

**SWIVEL-17.AL**
Aluminum Swivel 17-3/8" 250 lbs Capacity
**CASE QTY** 10 **WEIGHT/CASE** 40 lbs

**PT10.BK**
Plastic Pencil Tray Black 5-1/2" x 12-3/4" x 1"
**CASE QTY** 100 **WEIGHT/CASE** 30 lbs



PRIDE INDUSTRIAL®
DECORATIVE HARDWARE
FUNCTIONAL HARDWARE
& MORE

**NG58.**
5/8" Plastic Nail Glide
**CASE QTY** 10M **WEIGHT/CASE** 35 lbs
**BOX QTY** 5M

| Available Colors | Item Number |
|---|---|
| Tan | NG58.TN |
| White | NG58.WT |

**TRAY**
False Front Tray Plastic with no tab
**CASE QTY** 100

| Available Sizes | Item Number |
|---|---|
| 11" | TRAY 11.PLAS |
| 14" | TRAY 14.PLAS |

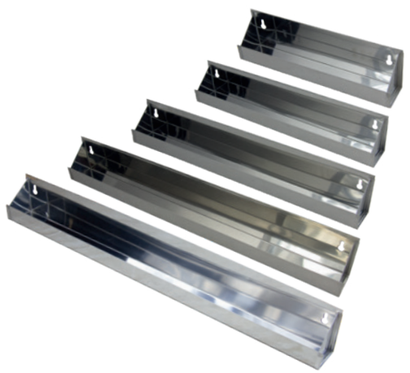

**NG34.**
3/4" Plastic Nail Glide
**CASE QTY** 10M **WEIGHT/CASE** 38 lbs
**BOX QTY** 5M

| Available Colors | Item Number |
|---|---|
| Tan | NG34.TN |
| White | NG34.WT |

**NG78.**
7/8" Plastic Nail Glide
**CASE QTY** 10M **WEIGHT/CASE** 41 lbs
**BOX QTY** 5M

| Available Colors | Item Number |
|---|---|
| Tan | NG78.TN |
| White | NG78.WT |

**TRAY**
False Front Tray Stainless Steel
**CASE QTY** 10

| Available Sizes | Item Number |
|---|---|
| 11" | TRAY 11.SS |
| 14" | TRAY 14.SS |
| 16" | TRAY 16.SS |
| 19" | TRAY 19.SS |
| 22" | TRAY 22.SS |
| 25" | TRAY 25.SS |

## SW-16-40G
16" Stretch Wrap 40 Gauge

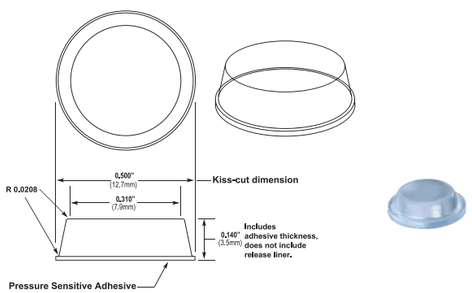


## BS-1-SD-200-CLR
1/2" Dia x 1/8" Thick Clear Bump-On

**Sold per Box**

| | |
|---|---|
| Per Box: | (5M) 5,000 pieces - 25 sheets |
| Per Sheet: | 200 Pieces - 10 across x 20 down |

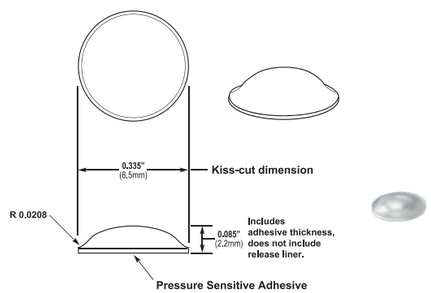


## BS-7-SD-450-CLR
3/8" Dia x 1/16" Thick Clear Bump-On

**Sold per Box**

| | |
|---|---|
| Per Box: | (5.4M) 5,400 pieces - 12 sheets |
| Per Sheet: | 450 Pieces - 15 across x 30 down |

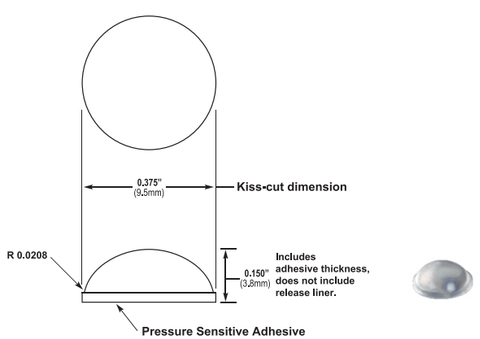


## BS-12-SD-288-CLR
3/8" Dia x 1/8" Thick Clear Bump-On

**Sold per Box**

| | |
|---|---|
| Per Box: | (7.2M) 7,200 pieces - 25 sheets |
| Per Sheet: | 288 Pieces - 12 across x 24 down |

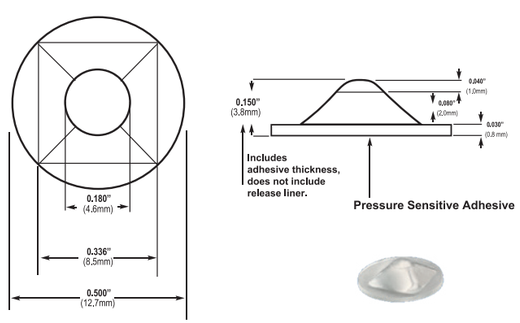


## BS-33-SD-CLR
1/2" Dia x 3/16" Thick Clear Bump-On

**Sold per Box**

| | |
|---|---|
| Per Box: | (5M) 5,000 pieces - 25 sheets |
| Per Sheet: | 200 Pieces - 10 across x 20 down |





# PRODUCT INDEX

**Symbols**

#633A.CL 121
#633A.SO 123
#633B.CL 121
#633C.CL 121
#633C.SO 123
#634A.CL 121
#634B.CL 121
#634C.CL 121
3000 101
3111-8D 112
3300 113
3300.S 113
3300CAM-SC 113
3300-SC 113
3302.S 113
3303CAM-SC 113
3303-SC 113
3304.S 113
3306CAM-SC 113
3311-8D-SC 110
33118DSC+3303CAMSC 110
3311-SC 110
33165-8D-SC 110
3322-8D-SC 110
3322-SC 110
3333-8D-SC 110
3333-SC 110
3345-8D-SC 110
3390-8D-SC 110
3411 112
3411-8D 112
34118DSC+3303CAMSC 112
34120-8D 112
34165-8D 112
3500 101
4000 102
4200 102
4400 117
4400.S 117
4400-CAM 117
4400-CAM.S 117
4401 117
4401-CAM 117
4402 117
4402.S 117
4402-CAM 117
4402-CAM.S 117
4403 117
4403-CAM 117
4411-8D-SC 117
4411-SC 117
4422-8D-SC 117
4422-SC 117
4433-8D-SC 117
4433-SC 117
4465-8D-SC 117
4465-SC 117
4600 97
4600-BRKT 97
4600-BRKTPI 97
4600-BRKTSO 97
4700 104
4800 98
4800-BRKT 98
4800-BRKTPI 98
4800-BRKTPI10 98
4800-BRKTSO 98
5000 100
5890 99
70BBDBL35PC 106
70BBSGL35PC 106
70BRKT 106
70TC35BK 105
70TC35GR 105
70TC35WT 105
72BMSC1215DBL 105
72BMSC1821DBL 105
72TMSC1821DBL 105
96T00TQ 113
96T02TQ 113
96T20TQ 113
96T22TQ 113
96T40TQ 113
96T42TQ 113

**A**

"ADVANTAGE PRO (7800 Series)" 95

**B**

B-3/4.WT 127
B850.NP 137
BKT-100 137
BS-12-SD-288-CLR 139
BS-1-SD-200-CLR 139
BS-33-SD-CLR 139
BS-7-SD-450-CLR 139
BUNN-1 81
BUNN-2 81
BUNN-3 81
BUNN-6 81
BUNN-7 81
BUNN-8 81

**C**

C04 130
C241.AL 129
C242.AL 129
C250 129
C285.SB 129
C411 130
C509 129
C907 130
C927 130
CB 126
CB90 126
CB94.BK 126
CH-1003.PC 61
CH-81160.BK 61
CH-81160.PC 61
CH-8363.PC 61
CL40 134
CL50 134
CLK.0 122
CLK.0S 122
CLK.0SC 122
CLK.2 122
CLK.2S 122
CLK.4S 122
CORBEL-A-1 77
CORBEL-A-10 78
CORBEL-A-11 78
CORBEL-A-15 67
CORBEL-A-2 77
CORBEL-A-3 77
CORBEL-A-4 76
CORBEL-A-5 78
CORBEL-A-6 78
CORBEL-A-7 78
CORBEL-A-9 78
CORBEL-B 75
CORBEL-BW-1 77
CORBEL-C 75
CORBEL-D 76
CORBEL-K 67
CORBEL-KL 67
CORBEL-M-1 75
CORBEL-M-10 74
CORBEL-M-11 75
CORBEL-M-13 67
CORBEL-M-2 75
CORBEL-M-4 75
CORBEL-M-5 74
CORBEL-M-6 74
CORBEL-M-8 76
CORBEL-T-1 74
CORBEL-T-2 74
CORBEL-T-4 77
CORBEL-T-7 76
CORBEL-T-8 77
CR-50 62
CR-51.CP 62
CR-52 62
CR-60.CP 62
CR-62.CP 62
CR-70 62
CR-71.CP 62
CR-72.CP 62
CR-73.CP 62
CR-75.CP 62
CR-77.CP 62
CR-80 62
CR-81.CP 62
CRCS-58 63
CRCS-68.CP 63
CRCS-78 64
CRCS-88 64
CRS-54 63
CRS-56 63
CRS-64.CP 63
CRS-66.CP 63
CRS-74 64
CRS-76 64
CRS-84 64
CRS-85 64
CRS-86 64
CRS-87 64

**E**

EC-14.AL 129
EE0 115
EE2 115
EECM0 115
EECM0S 115
EECM2 115
EECM2S 115
EES0 115
EES2 115
EFF0 115
EFF3 115
EFFCM0 115
EFFCM3 115
ESC30D 115
ESC45D 115
ESC90D 115
ESF105 115
ESF105D 115
ESHF105 115
ESHF105D 115
ESIN105 115
ESIN105D 115
EUSKT-1-L 103
EUSKT-1-R 103
EUSKT-2-L 103
EUSKT-2-R 103
EUSKT-5-L 103
EUSKT-5-R 103
EUSKT-6 103

**F**

F-B 126
FCL.0 122
FCL.3 122
FCL.6 122

## PRODUCT INDEX

FCL.S.0 122
FCL.S.3 122
FCL.S.6 122
FCLCAM.0 122
FCLCAM.3 122
FF 137
FIGURE 8 126
"FORTE PRO 3/4 6X (8534 Series)" 94
"FORTE PRO 6X (8500 Series)" 93
FSBRKT 66
FSM1012 66
FSM1024 66
FSM1030 66
FSM1036 66
FSM1042 66
FSWALNUT12 66
FSWALNUT24 66
FSWALNUT30 66
FSWALNUT36 66
FSWALNUT42 66
FSWTOAK12 66
FSWTOAK24 66
FSWTOAK30 66
FSWTOAK36 66
FSWTOAK42 66

G

GR1350-40.BK 135
GR186-45.BK 135
GR187-51 135
GR188-60 135
GR189-70 135
GR190-80 135
GR22.BK 136
GR63 136
GR76 136
GR-82910 136
GRE-71880003 136

H

H123 132
H124 132
H130.NI 132
H145 132
H250-D 124
H254-D 124
H275 124
H275.S-D 124
H280 124
H280.S-D 124
H280-D 124
H292-D 124
H292-D-SC 124
H294 125
H294-D 125
H294-D-SC 125
H294-SC 125
H295 125
H295-D 125
H295-D-SC 125
H295-SC 125
H296-D 125
H297 125
H297-D 125
H297-D-SC 125
H297-SC 125
H298-D 125
H298-D-SC 125
H2CAM280-D 124
H2CAM280-D-SC 124
H2CAM280-SC 124
H30-D.CL 121
H45-D.CL 121
H51A.CL 121
H52A.CL 121
H650.AB 131
H739 131
H739-RP. 131
H740.DC 108
H760 108
H760.SS 108
H760-45 108
H780.DC 108
H80-D.CL 121
H90.CL 121
HCAM280-D-SC 124
HCAM280-SC 124
HCAM634A.CL 121
HCLP297DSC 125
HCLP297DSCUA 125

K

K-1012.BK 60
K-102 29
K-102.SS 33
K-1218 17-27
K-1667 44
K-3910 54
K-53082 53
K-6030.BK 54
K-6361.SN 54
K-7141.BLAE 60
K-7141.SN 54
K-80110 48
K-80576 47
K-80960 49
K-80980 51
K-810.SN 52
K-81021.SN 54
K-81091 28
K-81353 46
K-81361 21
K-81784 46
K-82115 47
K-82142.SN 59
K-82928 59
K-82980 53
K-83125 24
K-83990 53
K-83991 53
K-86618 45
K-910 52
K-91090 21
K-910H 52
K-92230 13-15-22-41
K-92430 13-15-22-41
K-928 51
K-92925 19
K-93002 11
K-93122 12
K-94723 19
K-94727 20
K-95003 10
K-970 51
K-971 51
K-972 45

L

L35.KA 137
LB 126
LEG-1 82
LEG-3 82
LEG-4 82
LEG-6 82
LS18RD.3TRAY 107
LS18RD.WT 107
LS24KD.WT 107
LS24RD.WT 107
LS28KD.WT 107
LS28RD.WT 107
LS32KD.WT 107

M

"MEGA PRO (90 series)" 84-85
MP 126

N

NG34 138
NG58 138
NG78 138

O

ONLAY-1-M 79
ONLAY-2-L 79
ONLAY-2-M 79
ONLAY-2-S 79

P

P-0136 35
P-0146 35
P-0178 35
P-092910 57
P-1011.BK 60
P-104 29
P-105.SS 33
P-106 29
P-1068H.SS 33
P-107.SN 30
P-107.SS 33
P-108 30
P-108H.SS 33
P-109.SN 30
P-109.SS 34
P-1096 29
P-1096.SS 33
P-1096H.BK 33
P-1096H.SS 33
P-110 30
P-112 30
P-113.SS 34
P-114 31
P-115.SS 34
P-116 31
P-118.SN 31
P-119.SS 34
P-120 31
P-122 31
P-122.SS 34
P-124 31
P-124.SS 34
P-126.SN 31
P-128 31
P-128.SS 34
P-130.SN 31
P-133.SS 34
P-1803 43
P-1806 43
P-1809 43
P-1812 43
P-1876 43
P-21768 37
P-242.SN 35
P-29255.SS 40
P-353 50
P-354 50
P-355 50
P-356 50
P-370.SN 35
P-396 50
P-433 58
P-4655 55
P-50-160 40
P-50M 40
P-50S 40
P-675.BK/SS 58
P-7166.SN 56
P-72276.SN 36
P-72277.SN 36
P-72278.SN 36
P-80008 47
P-80014 44
P-8004.SN 57
P-80215 44
P-80281 48
P-80290 49
P-80572 24
P-8065.SN 55
P-80753 42
P-80814 57
P-80846 44
P-80846.128 44
P-81065.SN 55
P-81092 28
P-81145 56
P-81235 38
P-81297 46
P-81366 45
P-81456 37
P-81458 37
P-81541 39
P-81542 39
P-81572 24
P-81837.DN 35
P-82034 38
P-82092 28
P-82103 38
P-82104 38
P-82106 38
P-82234 38
P-8233 42
P-82981 42
P-83063 48
P-83092 28
P-83572 24
P-847 58
P-86373 27
P-86374 27
P-86375 27
P-86718 45
P-86765 46
P-87140.SN 26
P-87215 39
P-87216 39
P-87218 39
P-87226 25
P-87227 25
P-87228 26
P-87229 26
P-87300 26
P-8731.SN 55
P-87328.SN 26
P-88760.10B 57
P-888.SN 56
P-90396 41
P-91296 22
P-91297 22
P-91298 22
P-91496 21
P-91497 21
P-91498 21
P-92836 20
P-92837 20
P-92838 20
P-92926 17
P-92927 18
P-92928 18
P-93096 14
P-93128 14
P-93160 14
P-94096 16
P-94128 16
P-94160 16
P-94210 16
P-95096 11
P-95128 11
P-95160 11
P-953 42
P-955 59
P-96096 12
P-96128 12
P-96160 12
P-97096 10
P-97128 10
P-97160 10
P-A012.SN 56
P-A51012 7
P-A51018 7
P-A5108 7
P-A52012 7
P-A5208 7
P-A53012 7
P-A53018 7
P-A5308 7
P-A54012 8
P-A54018 8
P-A5408 8
P-A55012 8
P-A5508 8
P-A56012 8
P-A56018 8
P-A5608 8
P-A57012 9
P-A5708 9
P-A58012 9
P-A5808 9
P-A59012 9
P-A59018 9
P-A5908 9
PB-9 80
PED-2-C 80
PED-C 80
PED-CR 80
PED-L 80
PED-M 80
PED-R 80
"PERFORM MAX 6X (9903 Series)" 88
"PERFORM PRO 2X (9800 Series)" 91
"PERFORM PRO 3/4 2X (8034 Series)" 92
"PERFORM PRO 3/4 6X (8834 Series)" 90
"PERFORM PRO 6X (9880 Series)" 89
PL100.BK 134
POST-A 71
POST-A-5X36 72
POST-A-5X42 73
POST-A-H 70
POST-B 71
POST-B-5X36 72
POST-B-H 70
POST-C 71
POST-C-5X36 73
POST-C-H 70
POST-D 71
POST-E 71
POST-E-H 70
POST-F-5X36 73
POST-G 71
POST-G-5X36 73
POST-G-H 70
POST-K 68
POST-K-5X42 68
POST-M-5X36 73
POST-M-H 70
POST-S 69
POST-S-5X42 69
POST-T 72
POST-X 68
POST-X-5X42 69
PT10.BK 137

R

RTA 128
RTA-3 128

S

SHC-1.ZP 133
SHC-2 133
SHP-21.WT 133
SHS-6 133
SL10WT 128
SLO.0 123
SLO.2 123
"SOFT PRO X (4903 Series)" 96
SP-245.BK 130
SRP-30.WT 133
SS01-1/4 127
SS01-5MM 127
SS19-5MM.ZP 127
SS20-5MM.ZP 127
SS21-1/4 127
SS21-5MM 127
SS23 128
SS35 128
SS36 128
SW-16-40G 139
SWIVEL-17.AL 137
"SYNC PRO (61SF)" 86-87

T

T00TQ 122
T02TQ 122
T0CTQ 122
T20TQ 122
T22TQ 122
T42TQ 122
TBS 76
TBT 76
TR 137
TRAY 138

# TERMS & CONDITIONS

All sales are expressly conditioned on Buyer's agreement to the terms and conditions set forth below. Any order or statement of intent to purchase goods, or any direction to proceed with procurement or shipment of goods, or any acceptance of or payment for goods shall constitute Buyer's agreement to those terms and conditions.No other representative of Seller is authorized to modify these terms and conditions, or to agree to any additional or different terms or conditions.

## New Orders

All new orders must be submitted in writing. They can either be emailed to: sales@prideindustrial.com or faxed to 909-334-4377

## Will Call

Pride Industrial requires a 3 hour window for will call orders. If an early pick-up is required, the order must be submitted and confirmed the day before the pick-up. If a truck or carrier will be picking up, please request an appointment to avoid delays.

Will Call hours are from 10:00 AM to 3:00 PM, Monday through Friday. Hours subject to change without notice.

## Shipping

Unless otherwise noted on the purchase order, Pride Industrial reserves the right to choose the best shipping method and bill for freight charges.

## Return Policy

1) For products without defect and or no error in order preparation /shipping on Pride's part, we can accept return:

- Within 48 hours of order placing with 0% restocking fee.
- After 48 hours but within 10 days from order placing date: 10% restocking fee.
- After 10 days up to 90 days from order placing date: 20% restocking fee.
- No return is accepted after 90 days.
- All products for return must be in factory original packaging and be in resalable condition.
- No returns will be accepted at Pride without a RMA attached to the return.
- Freight will be prepaid by customer.

NOTE:
SPECIAL ORDER ITEMS MAY NOT BE RETURNED.

2) For products with possible defect and or error in order preparation/shipping on Pride's part:

- There will be no restocking fee.
- But return must be secured with RMA in order that is accepted for a credit or merchandise exchange.
- Original packaging must be relatively in good condition for a full credit, otherwise some fees may apply if new boxes must be purchased and products have to be repackaged.

## Claims

Goods in transit travel at the risk of the purchaser. Damage and/or shortage must be noted upon receipt and be countersigned by the delivering carrier's agent. We will be pleased to furnish any information or assistance needed to establish a customer's claim against the carrier. Within 3 days after tender of, delivery to or receipt of any shipment and before any part of the material has been changed from its original condition, Buyer shall inform Seller in writing if the material is found defective or short in any respect. Seller is not liable for loss or damage in transit.

## Responsibility

We assume no liability for damage to person or property caused by merchandise bought from us. All specifications and engineering information have been reproduced for our customer's convenience only. Pride Industrial shall not be liable for any special indirect, incidental or consequential damages, including (but not limited to) loss of profits or revenue; loss of use of the goods or related goods, damage or injury to the person or property of Buyer or others. The remedies of Buyer set forth herein are exclusive and Seller's liability on any claim for loss or damage arising out of the sale of goods or arising out of anything done in connection with such a sale, whether in contract or tort or under warranty or otherwise, shall not exceed the price of the product or part on which such liability is based.

Pride Industrial LLC 909-334-4388

ADA FRIENDLY

## AMERICANS WITH DISABILITIES ACT

### ADA – Friendly

Many of the decorative pulls offered by Pride are designed with accessibility and ergonomics in mind. Collections that carry the ADA-Friendly designation feature the clearance necessary, based on the Dreyfus Human Factor Scale, to accommodate the hand of an average man. Our ADA-Friendly pulls are shaped for ease of grip and don't require tight grasping, pinching or twisting, as prescribed in Section 309.4 of the ADA Accessibility Guidelines (ADAAG)

PRIDE DÉCOR®

WELCOME TO THE PRIDE

## LOCATIONS

15221 FAIRFIELD RANCH ROAD
UNIT 120
CHINO HILLS, CA 91709

4653 LESTON STREET
SUITE 701
DALLAS, TX 75247

909-334-4388

WWW.PRIDEDECOR.COM

ESTABLISHED IN 2005